VALLESE

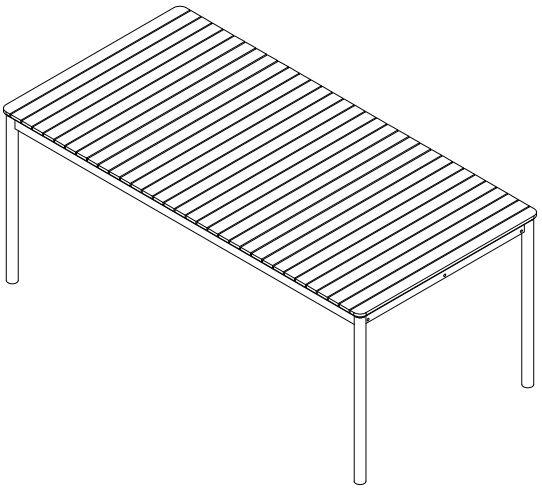

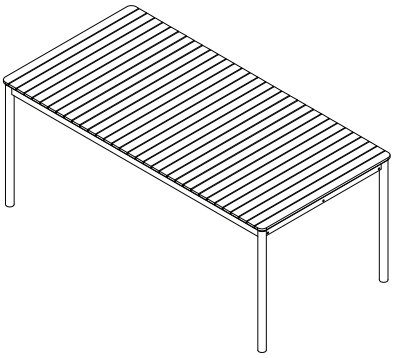

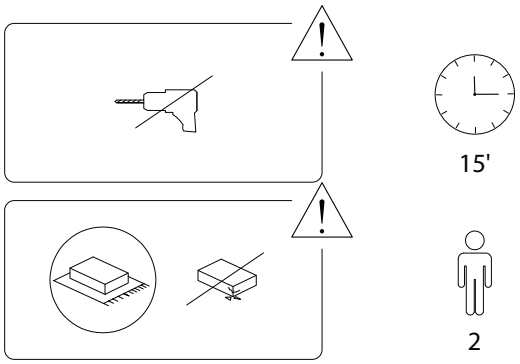

1/3

1085/VALLESE/190724/

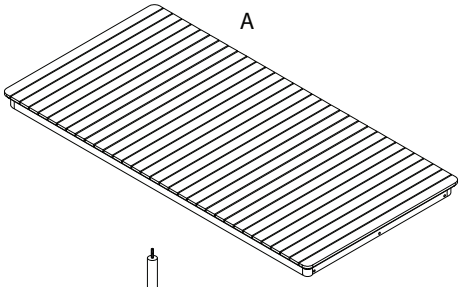

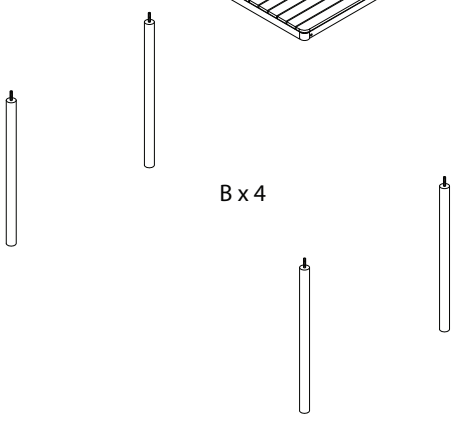

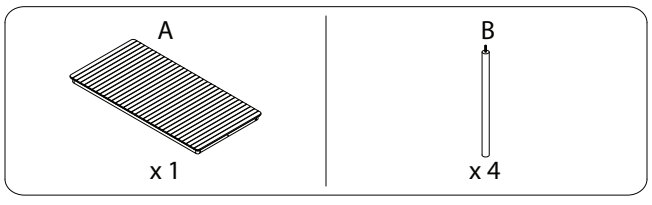

2/3

1085/VALLESE/190724/

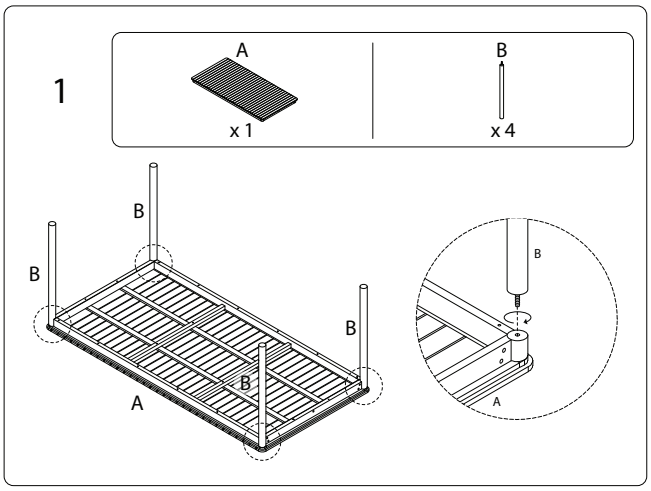

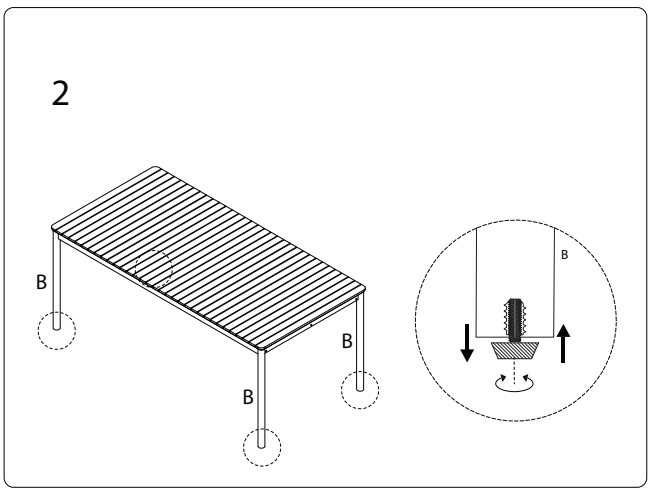

3/3

1085/VALLESE/190724/