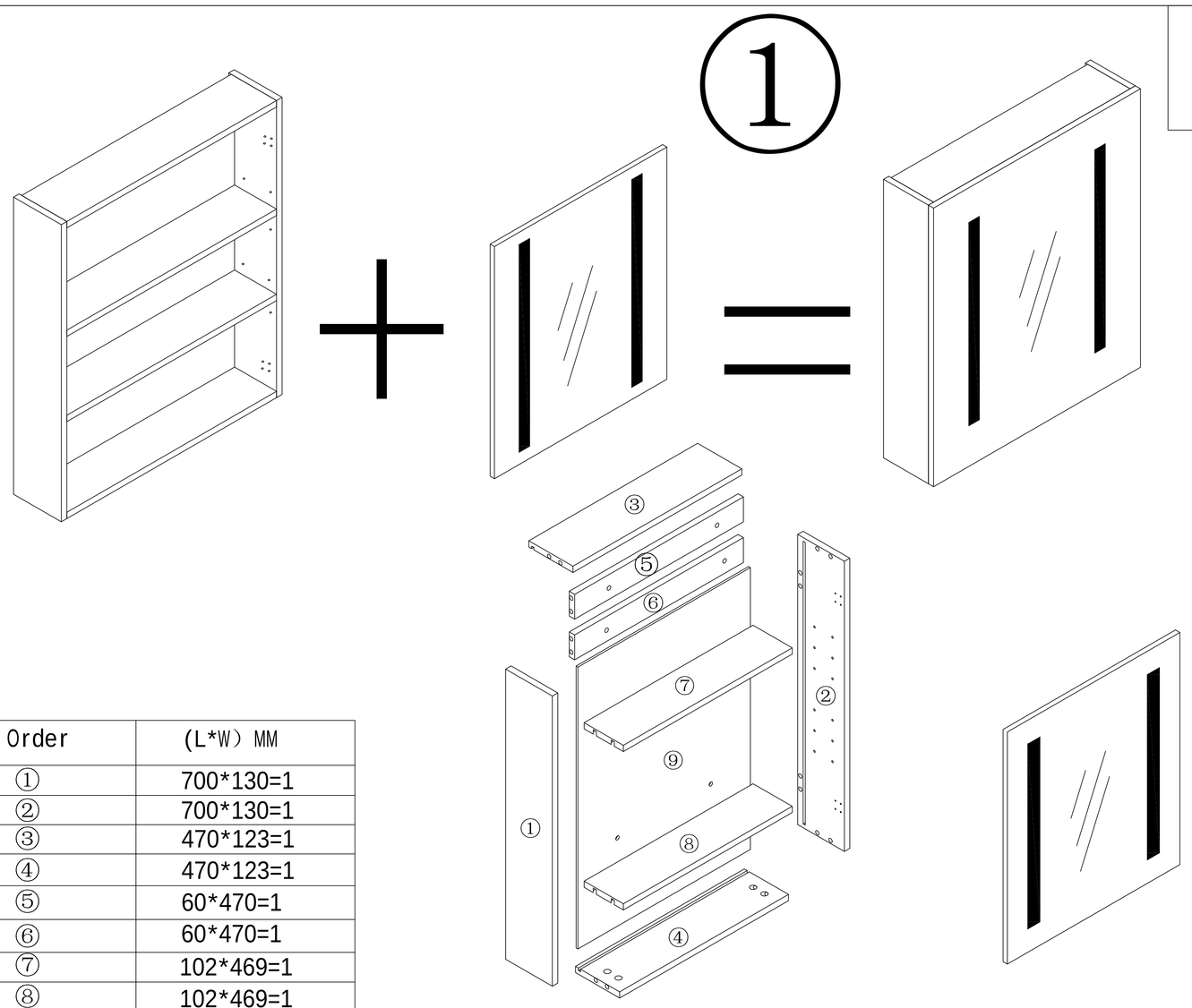

YS-GT5070

Order	(L*W) MM
①	700*130=1
②	700*130=1
③	470*123=1
④	470*123=1
⑤	60*470=1
⑥	60*470=1
⑦	102*469=1
⑧	102*469=1
⑨	480*680=1
	500*700=1

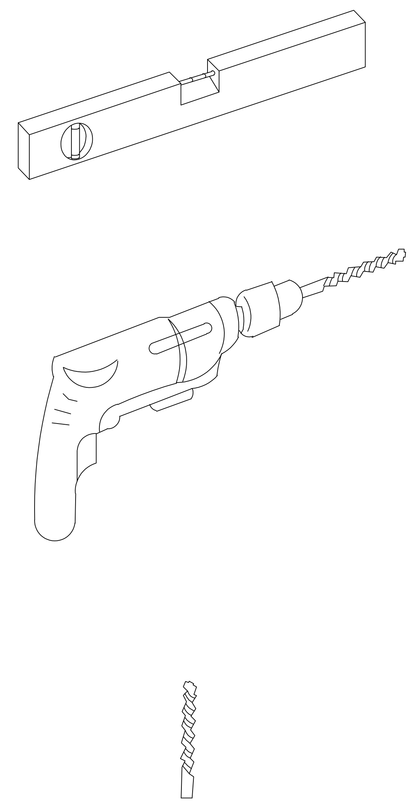

3mm-3.2mm

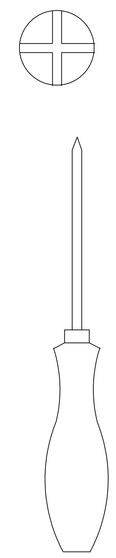

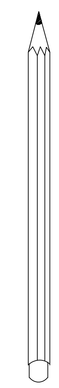

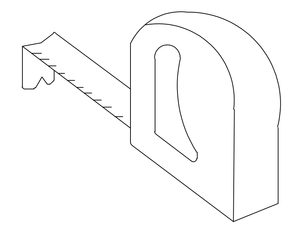

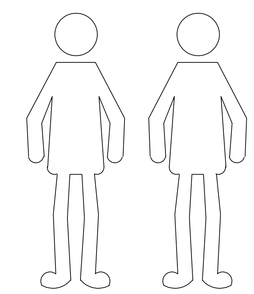

A

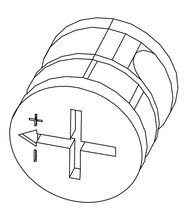

⌀15*13mm
=16

V

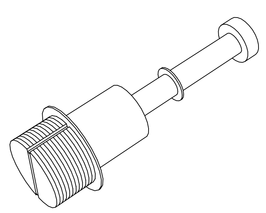

⌀8*40mm
=16

N-N

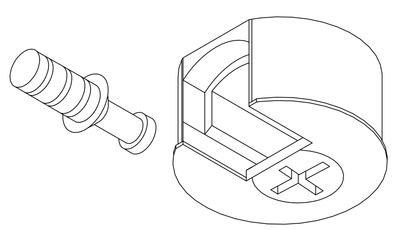

ϕ20*10mm
=8

F

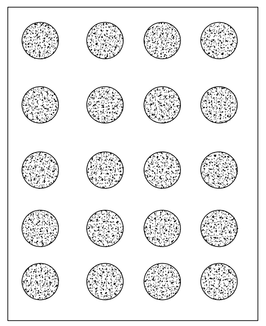

⌀20*0.3mm
=16

K

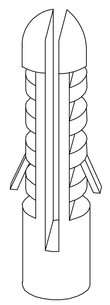

⌀10*43mm
=4

L

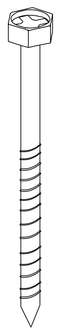

⌀6*70mm
=4

G-B

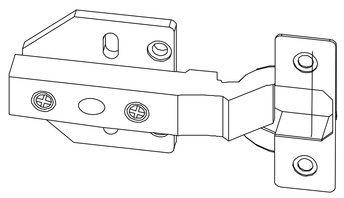

DTC-C80
=2

I

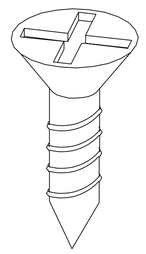

4*14mm
=12

J

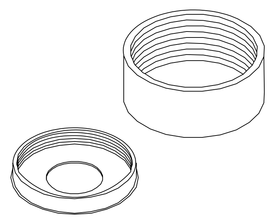

⌀20*8mm
=4

AA

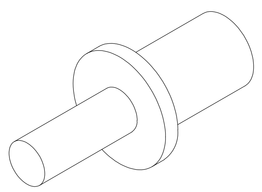

⌀7.5*16mm
=2

AB

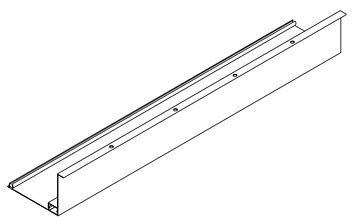

80mm*60mm
=1

AC

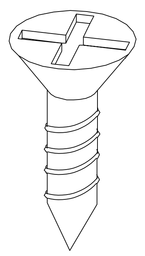

⌀2.6*12mm
=4

AD

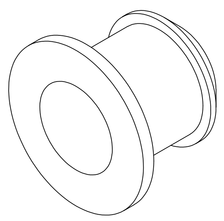

⌀10mm
=1

1

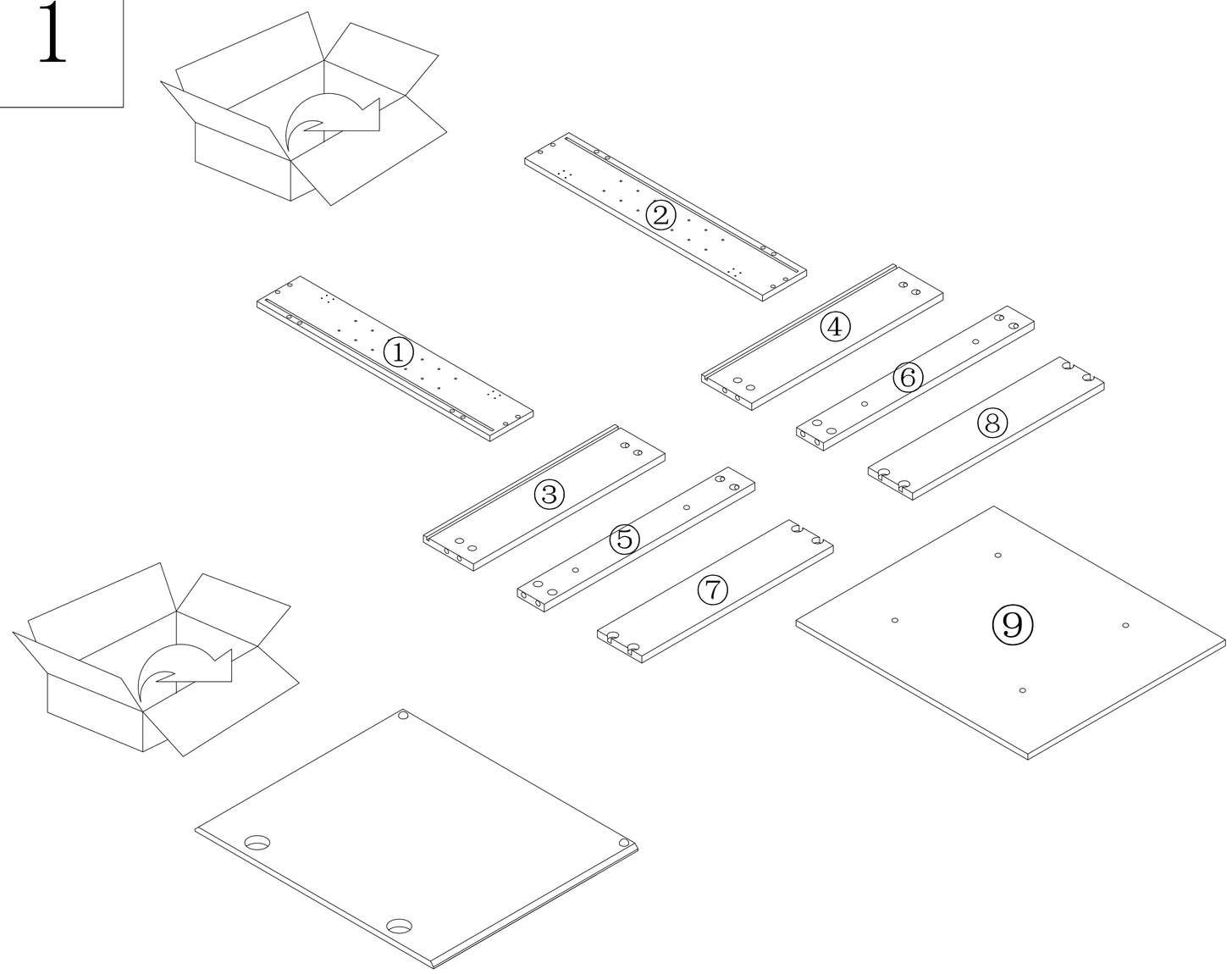

2

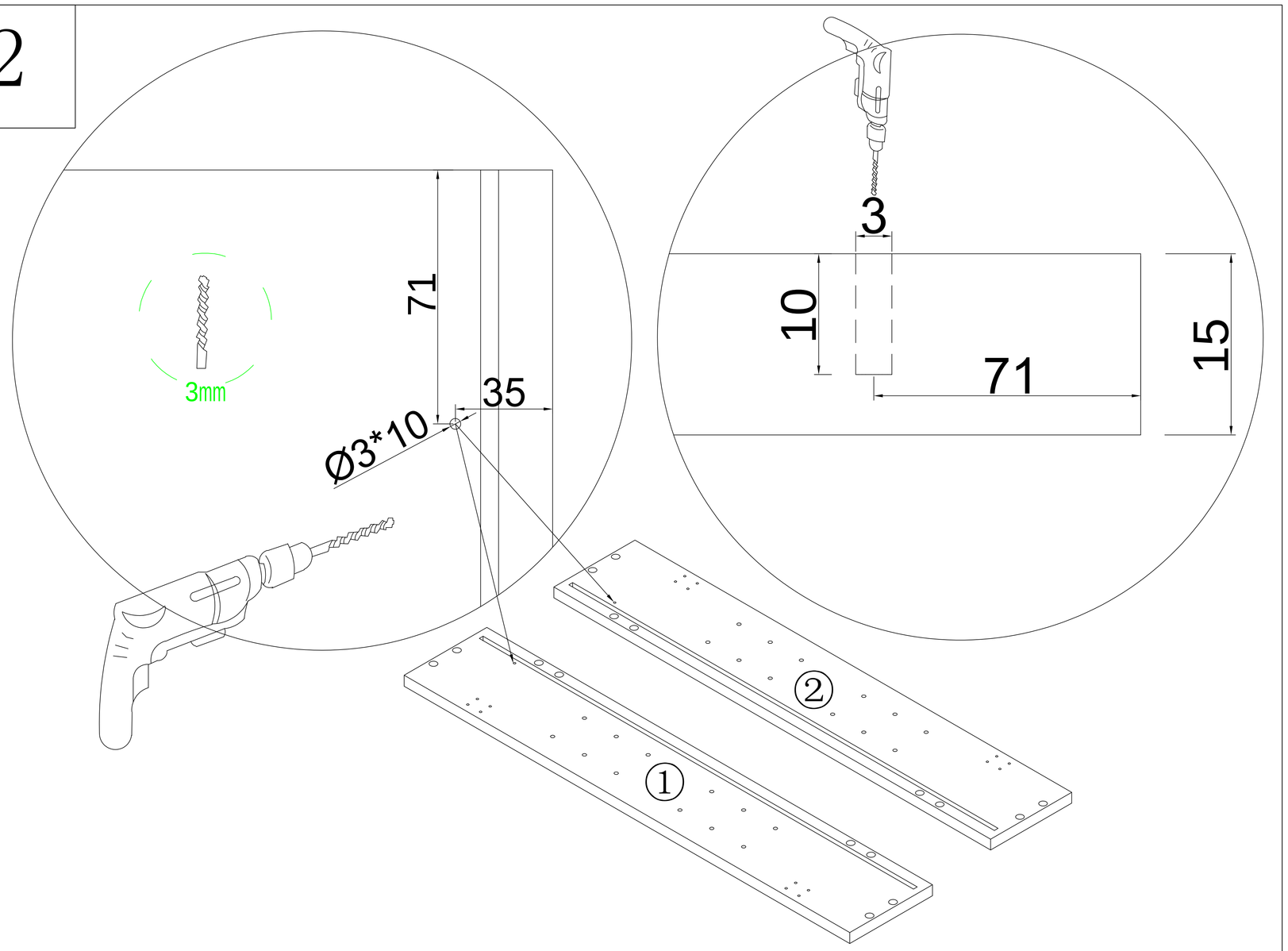

3

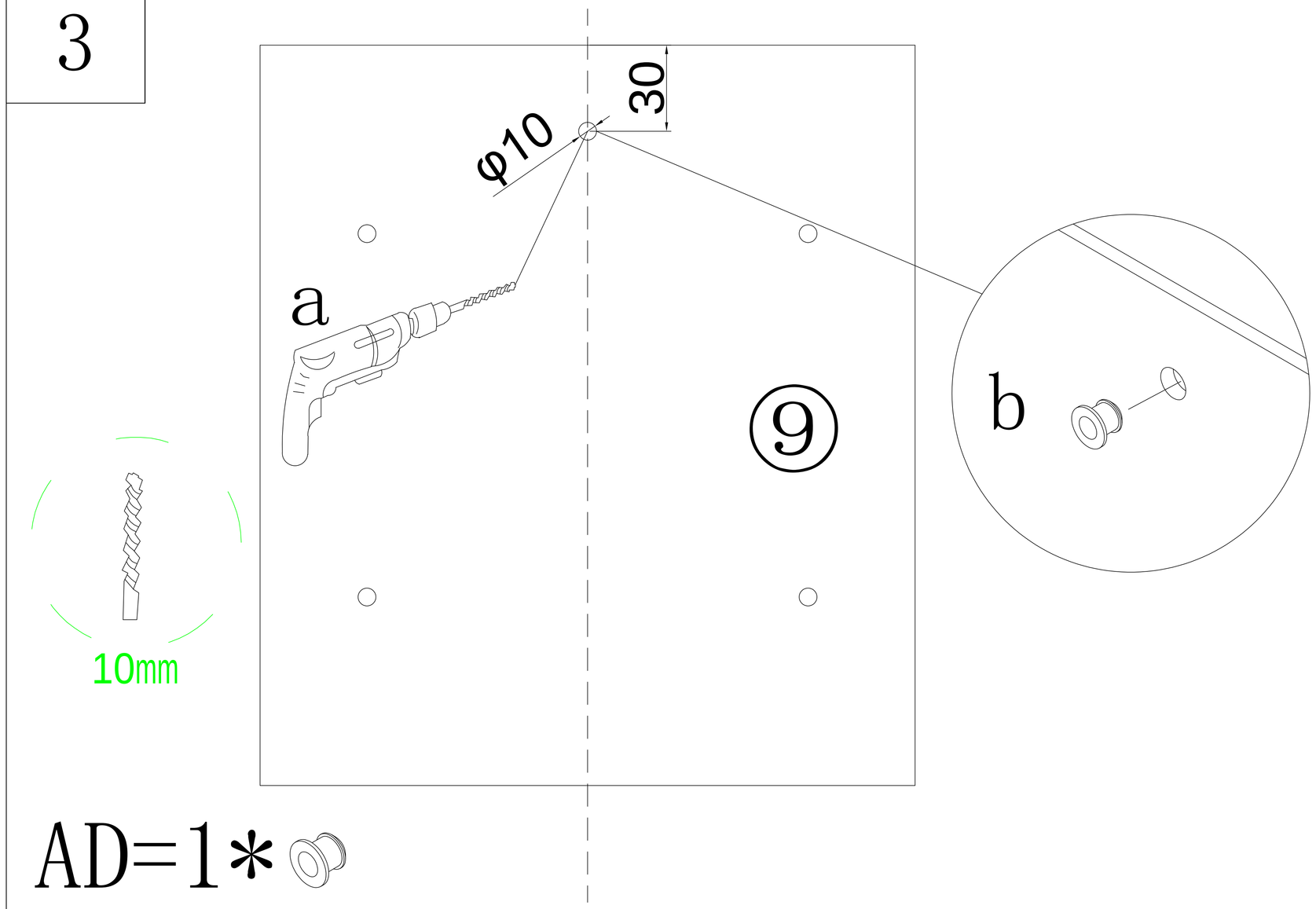

AD=1*

4

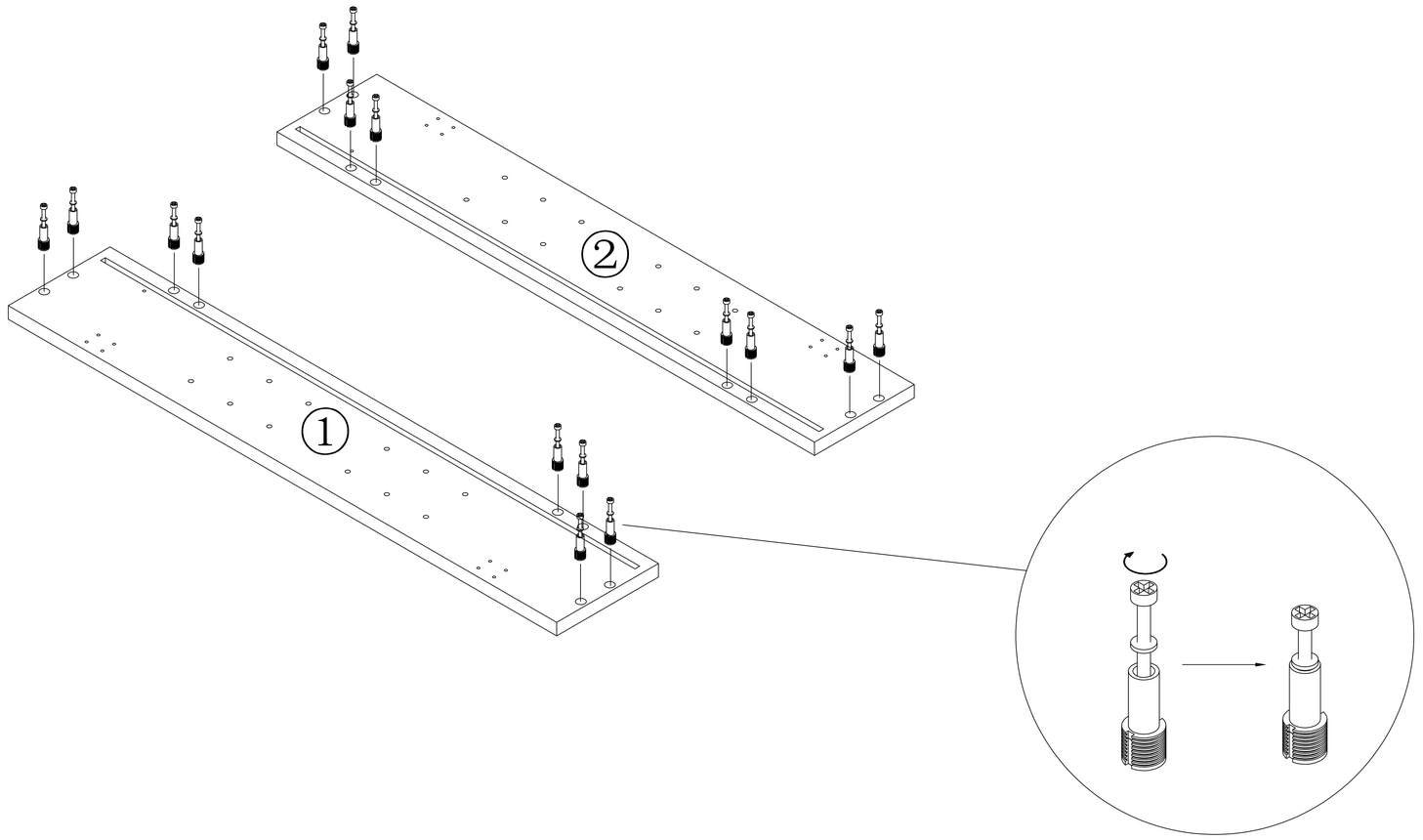

V=16*

5

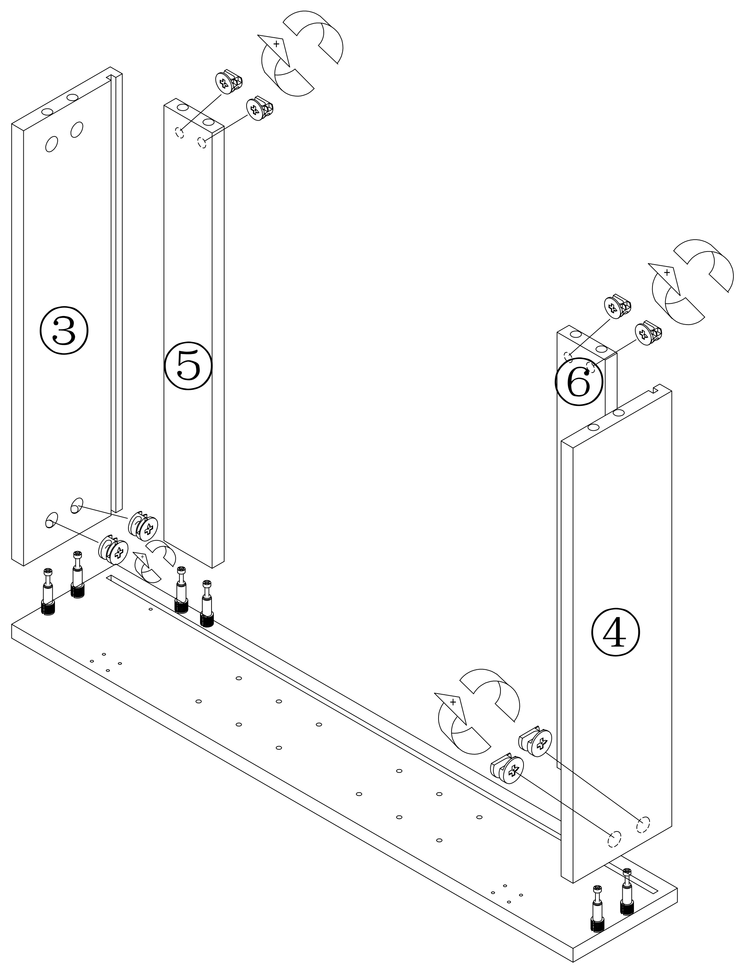

A=8*

6

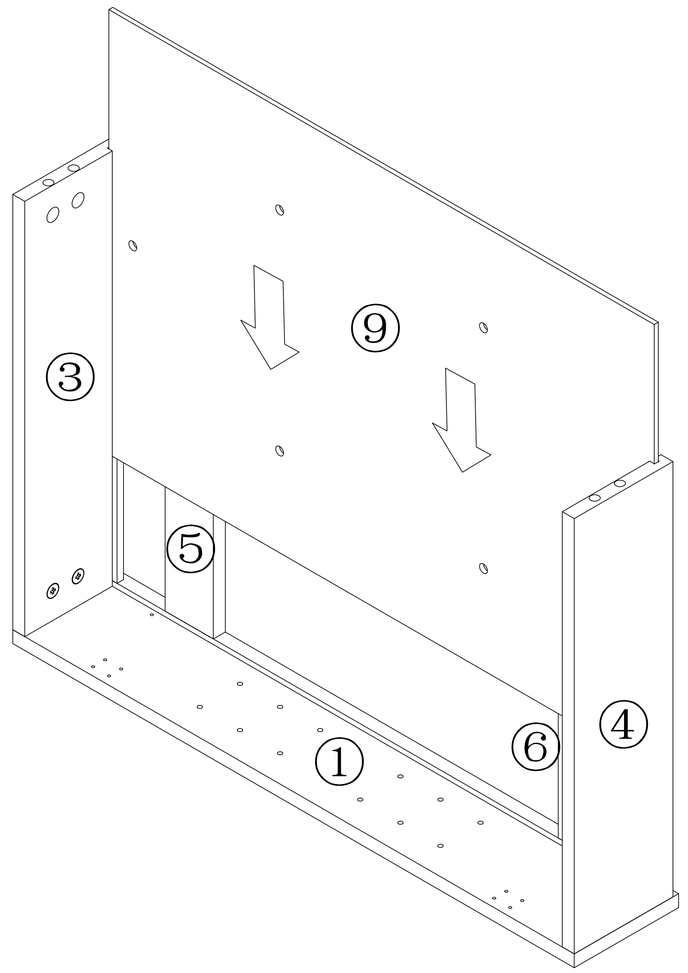

7

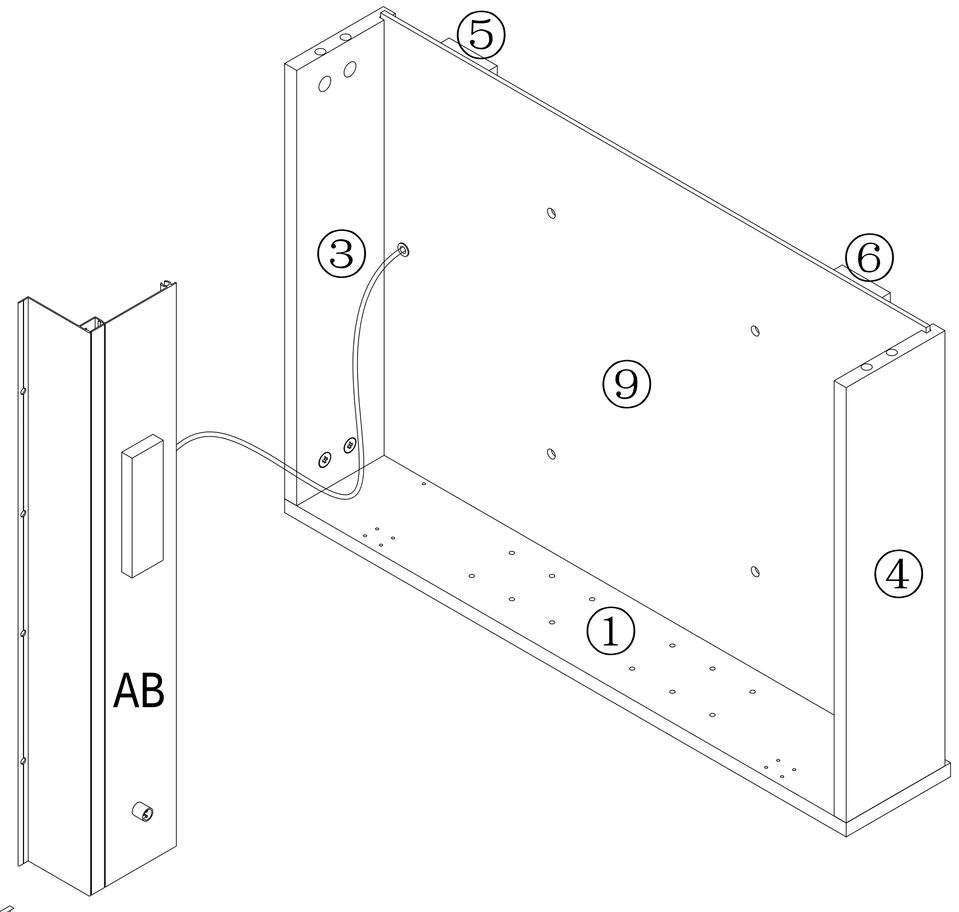

AB=1*

8

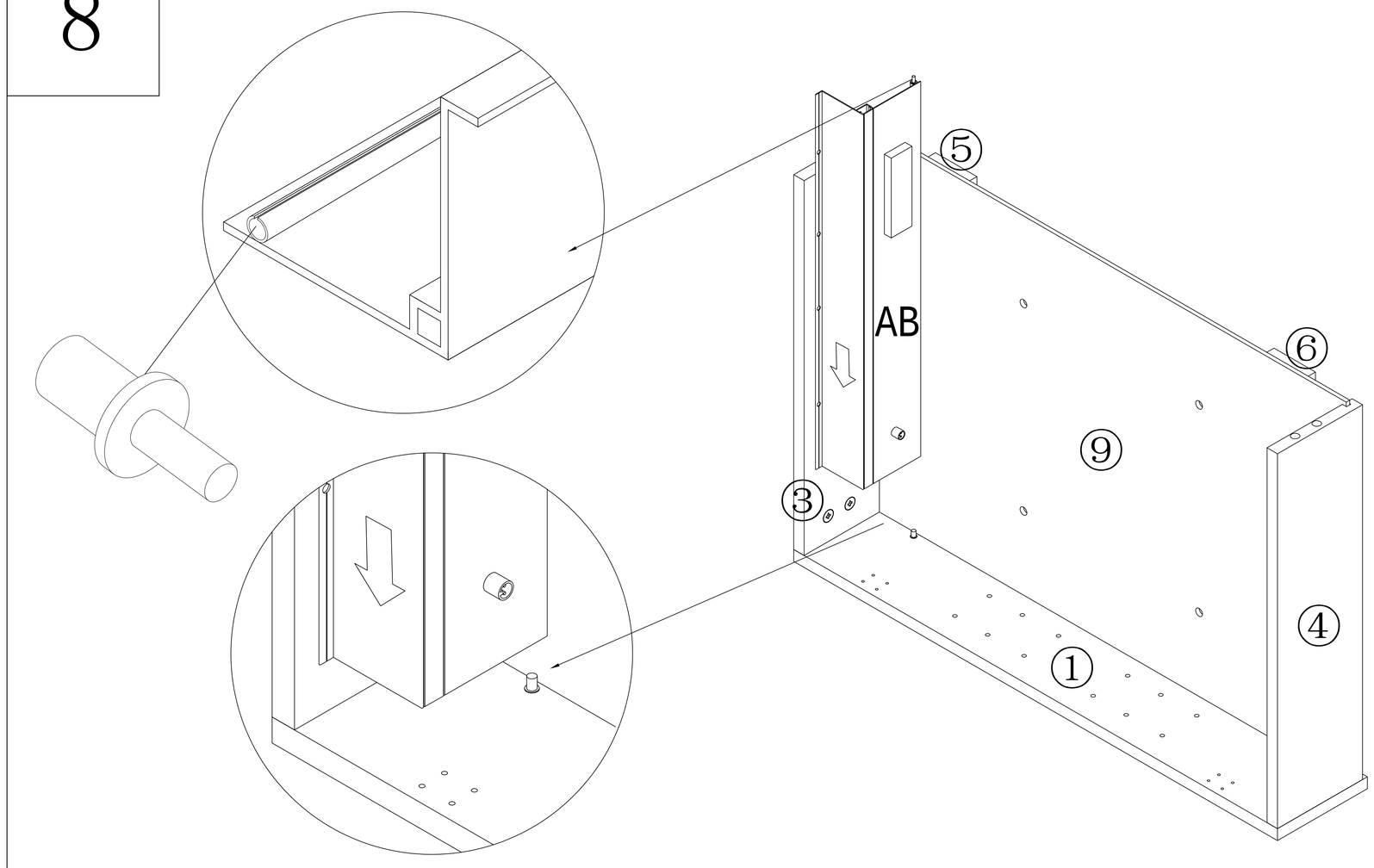

AA=2*

9

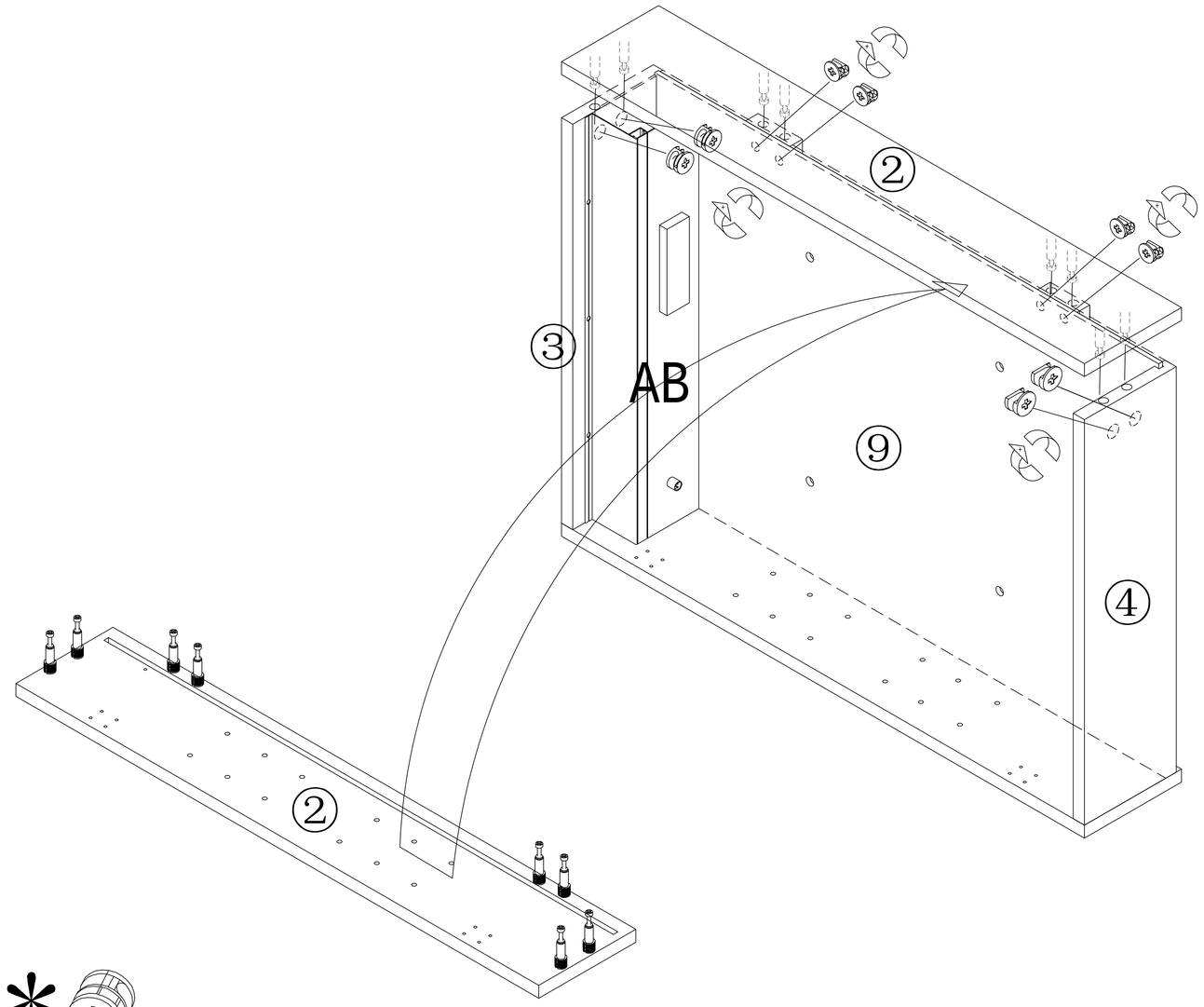

A=8*

10

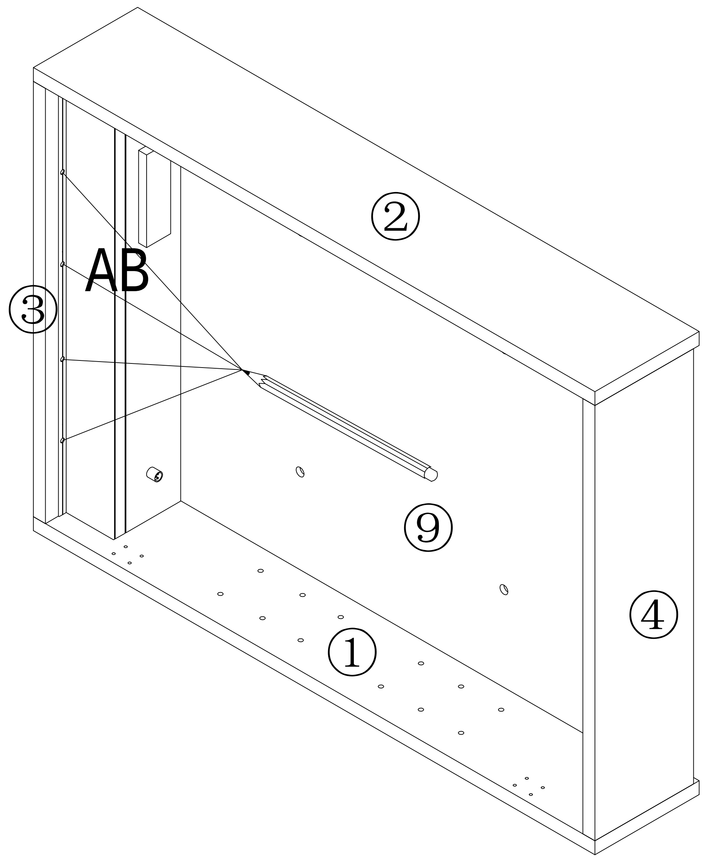

11

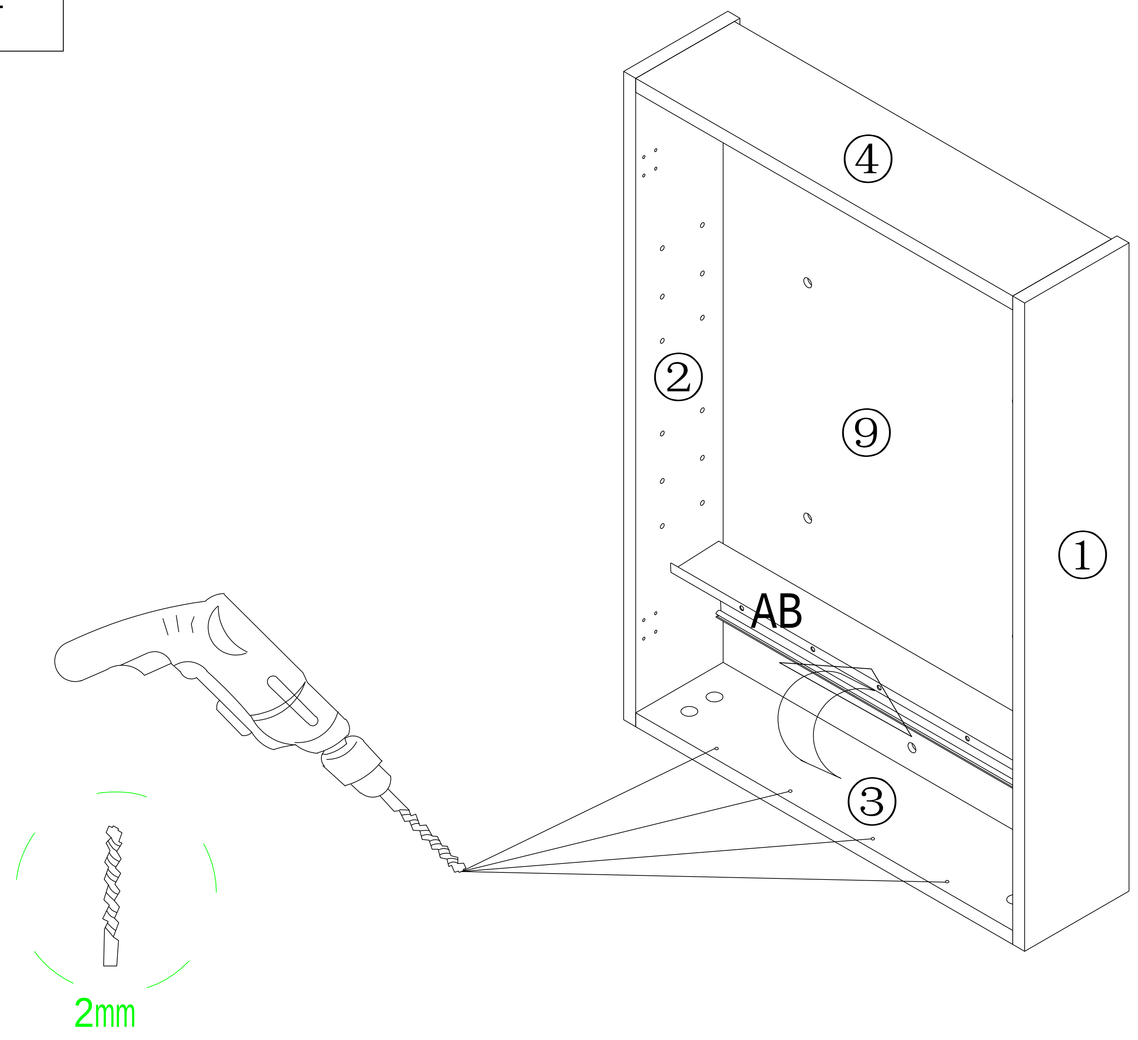

12

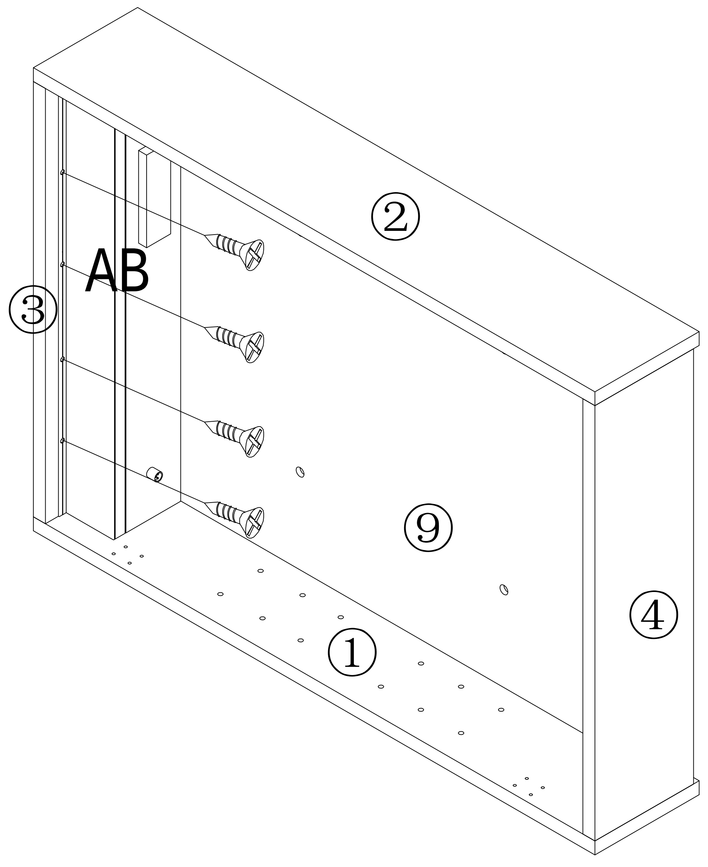

AC=4*

13

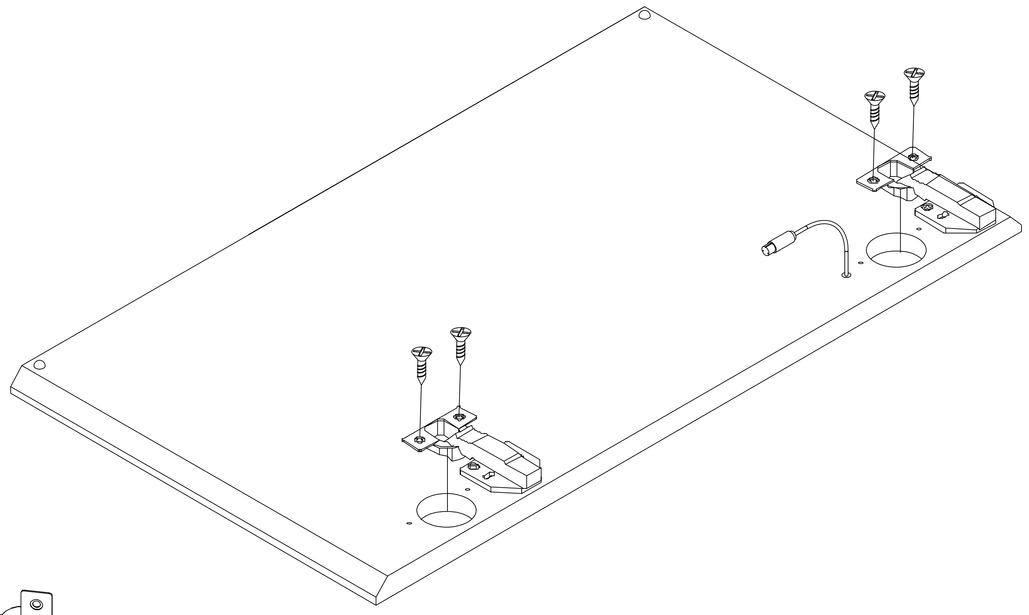

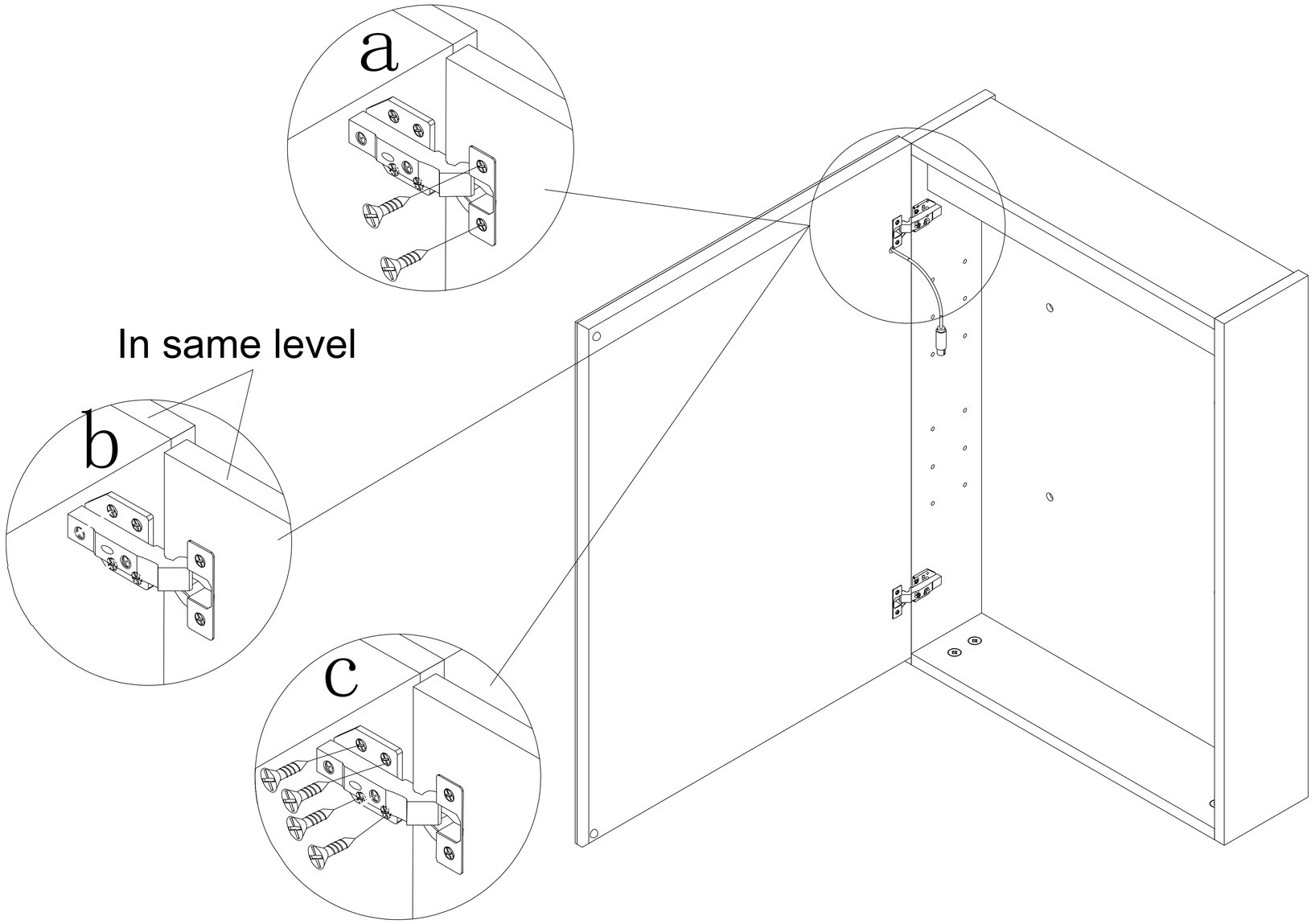

G-B=2*

I=12*

14

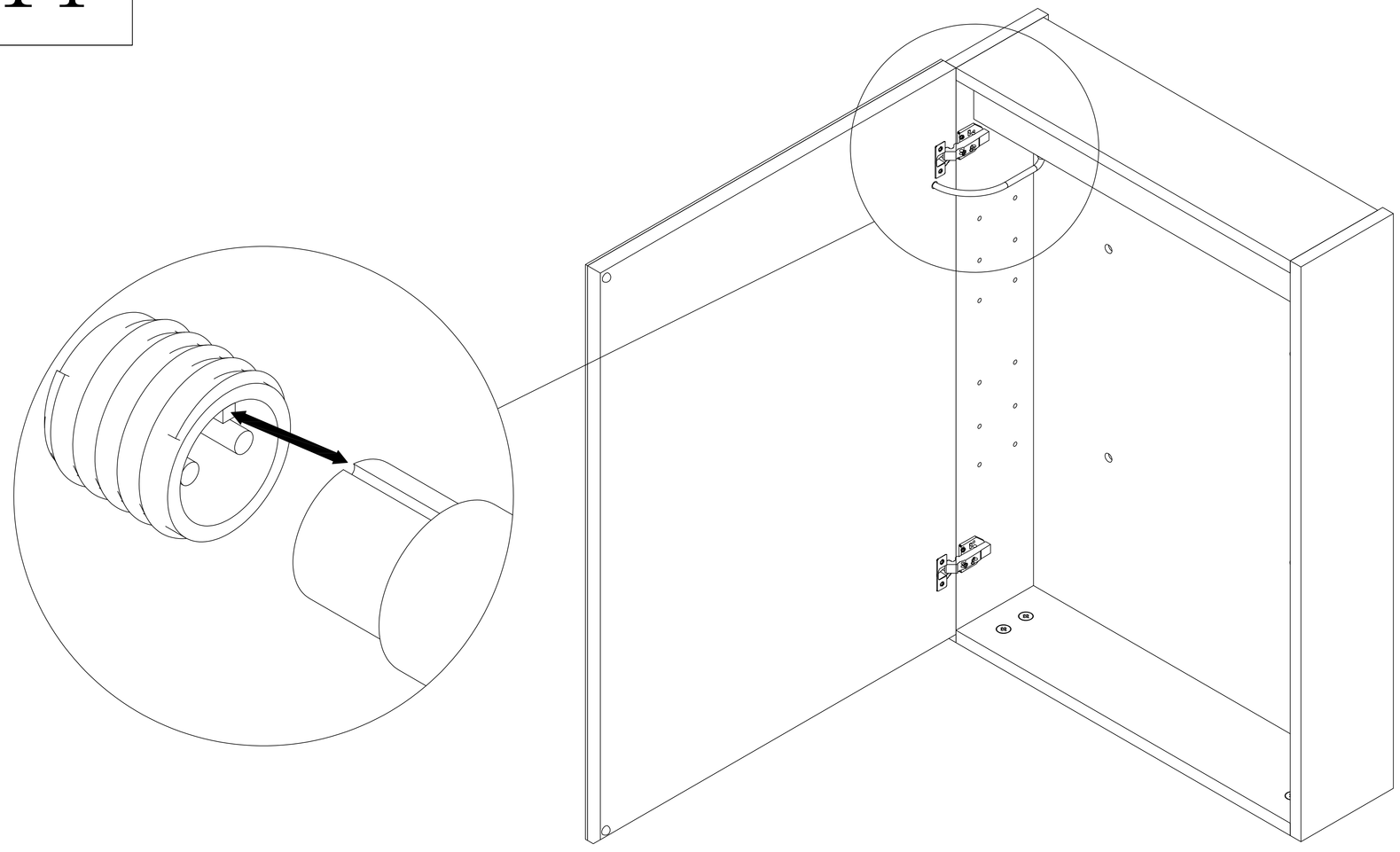

15

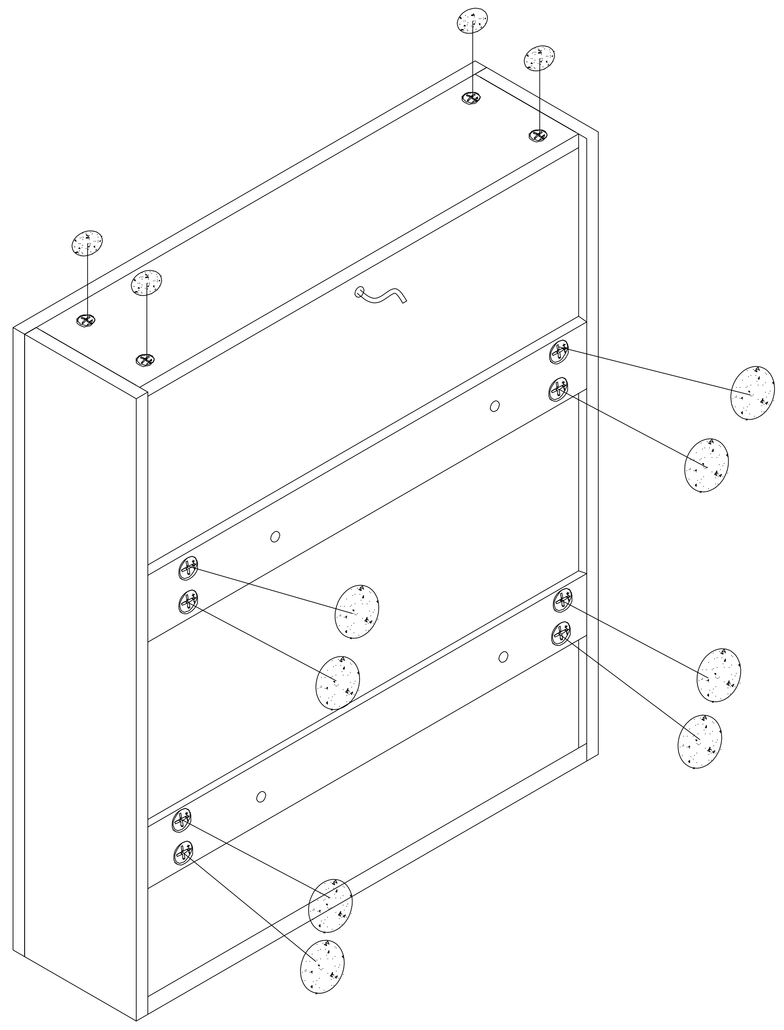

F=16

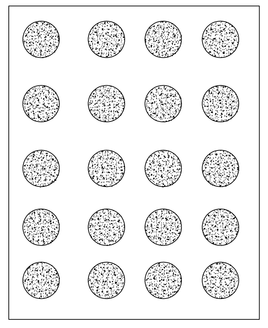

16

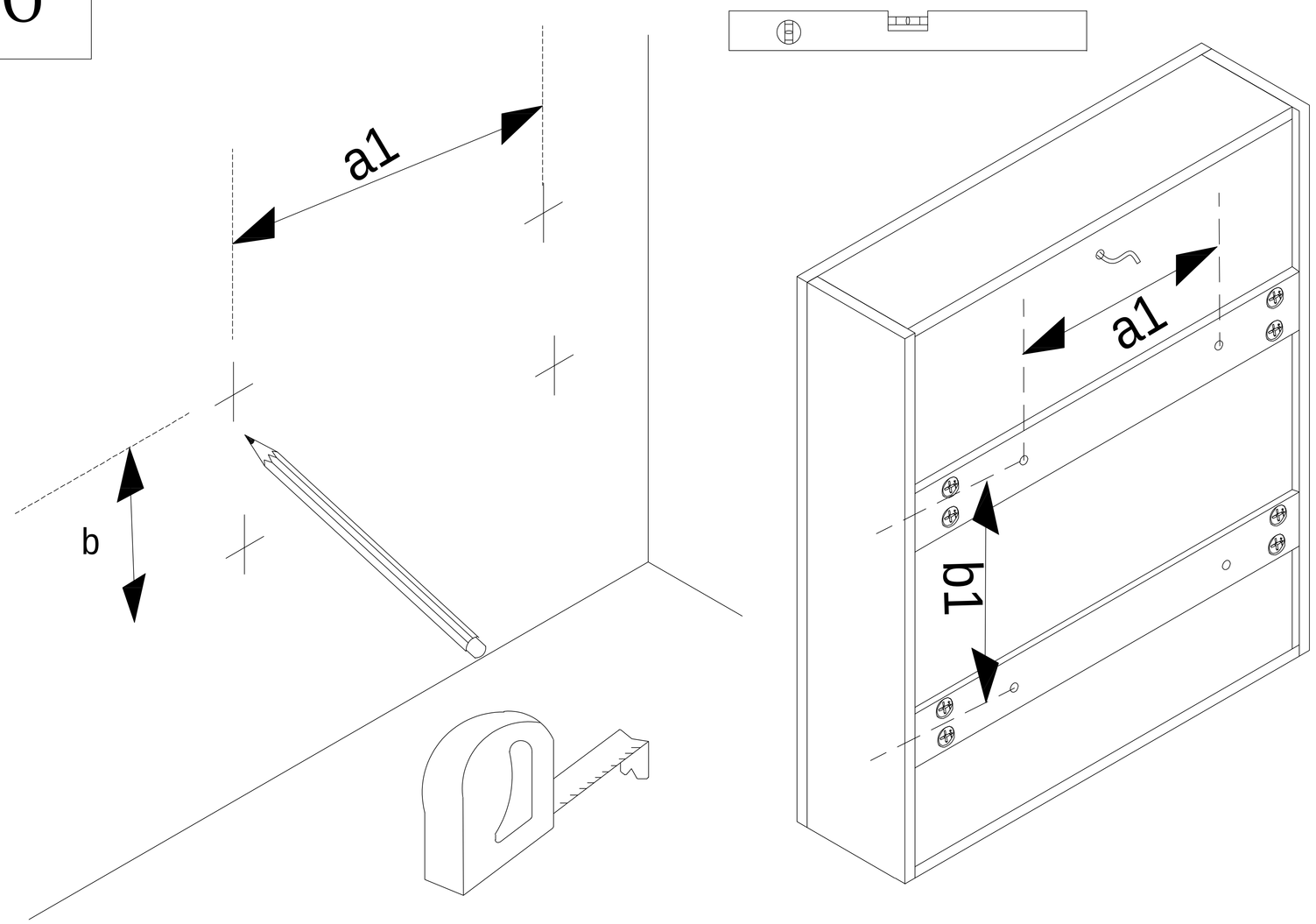

17

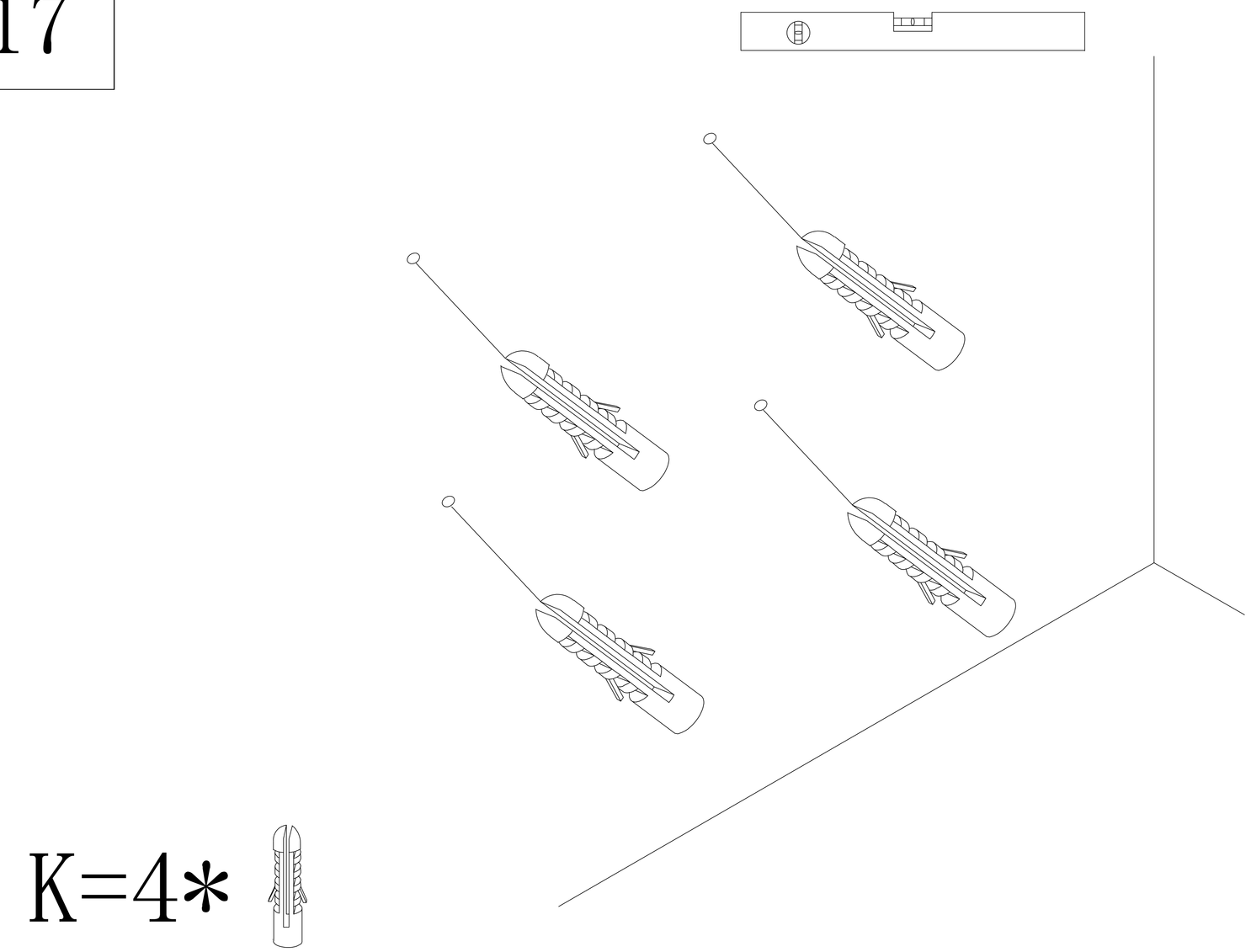

18

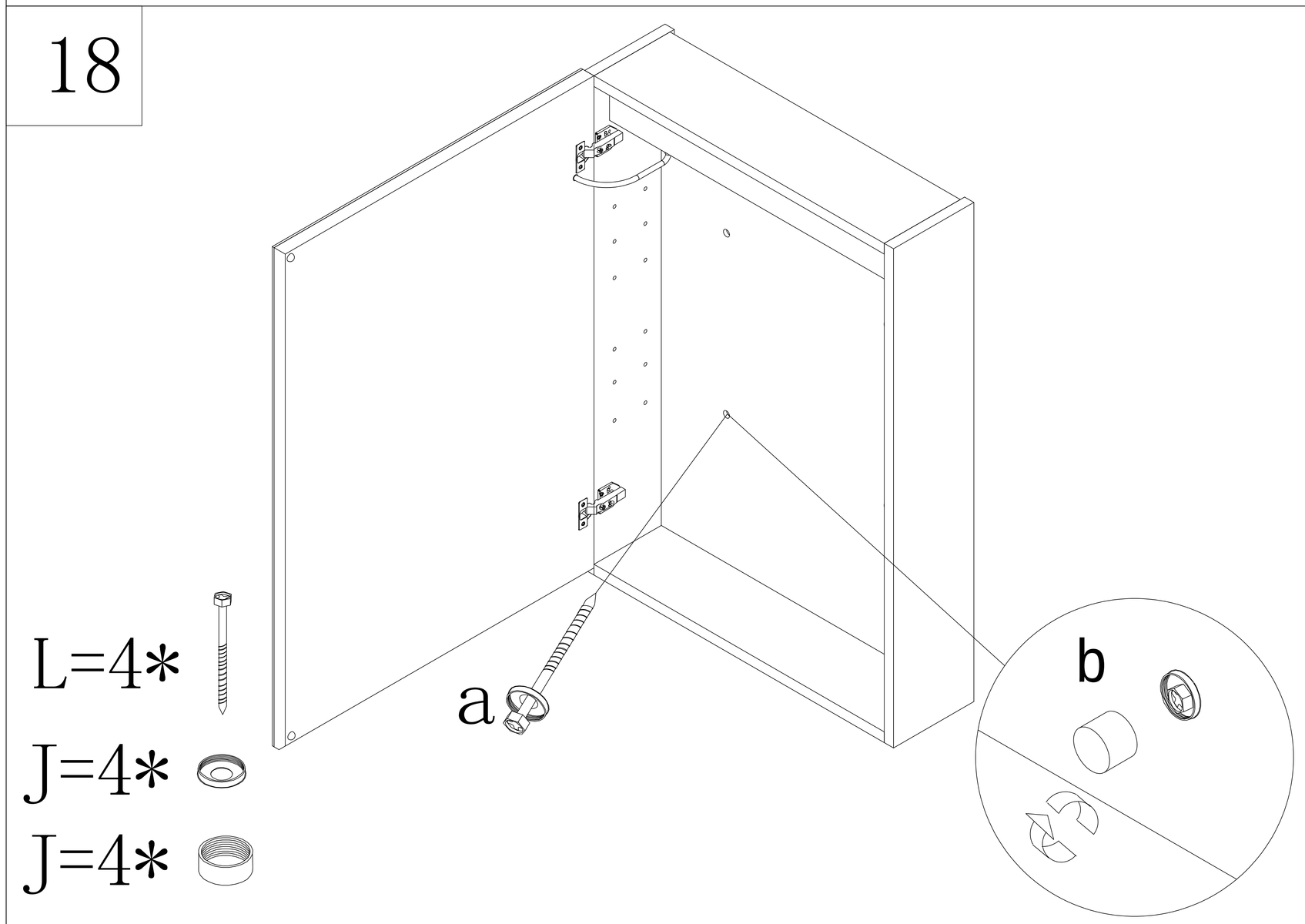

19

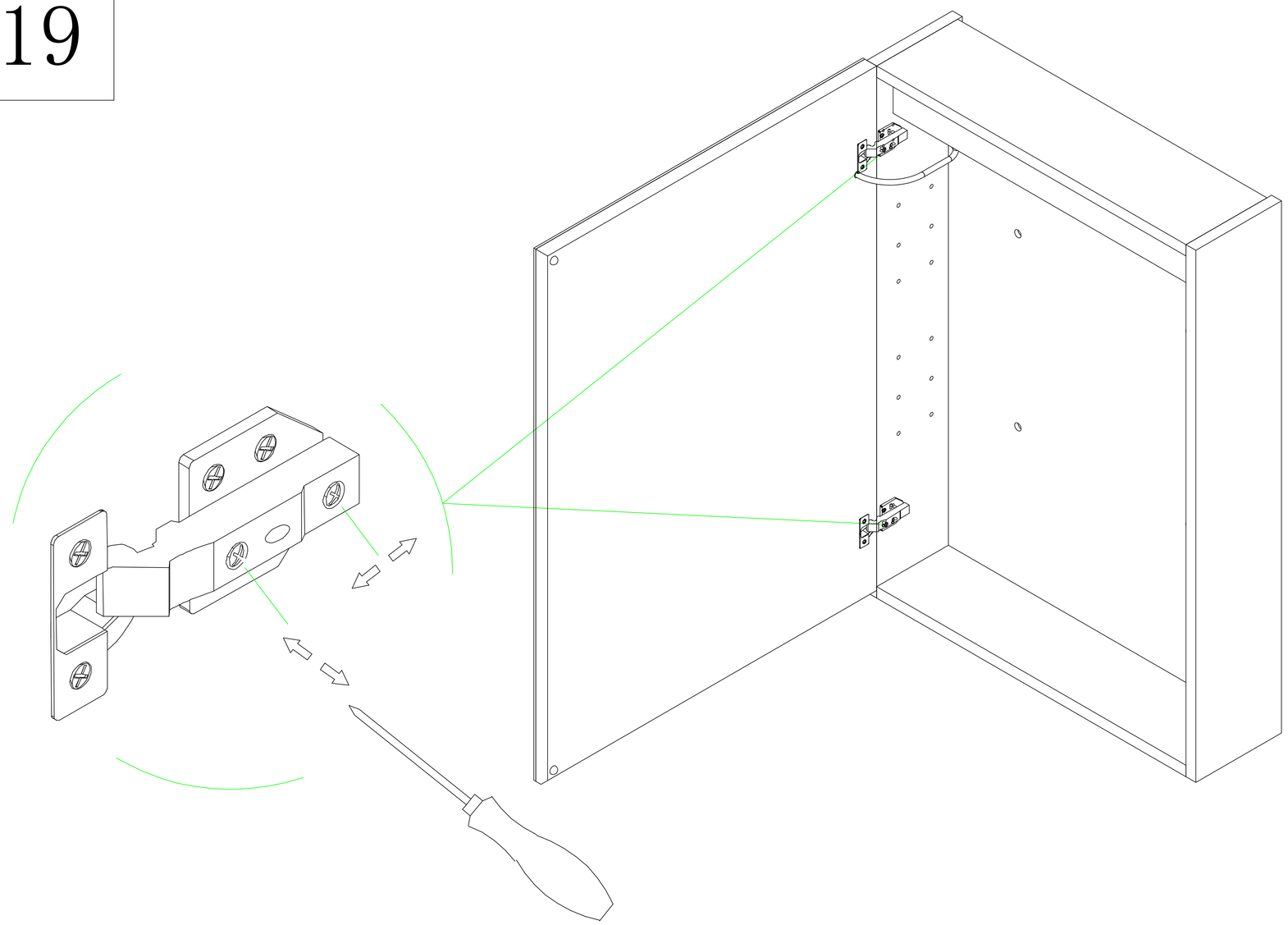

20

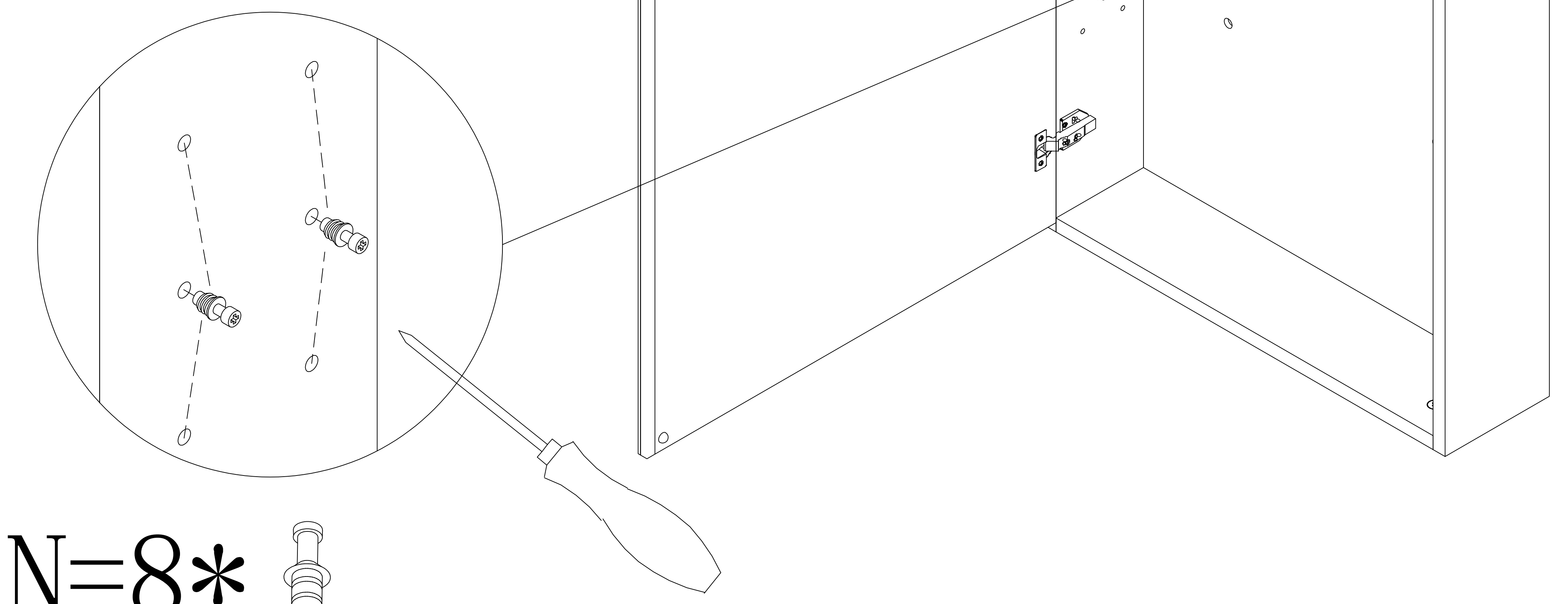

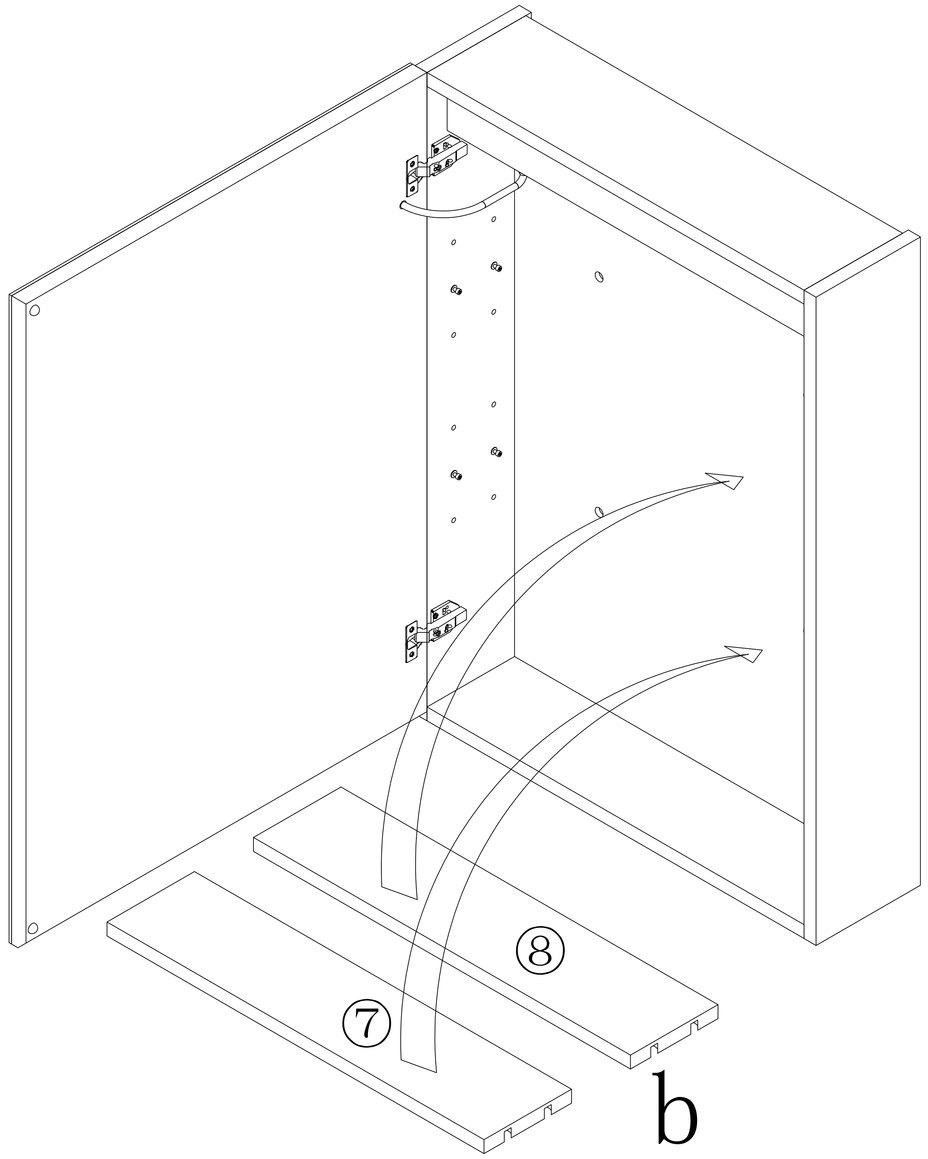

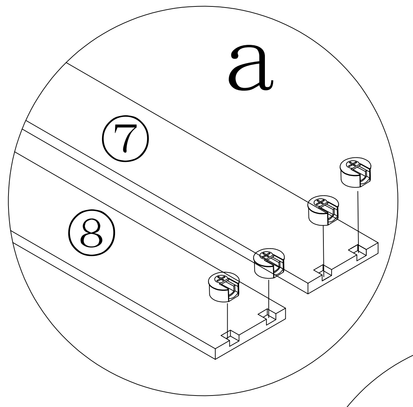

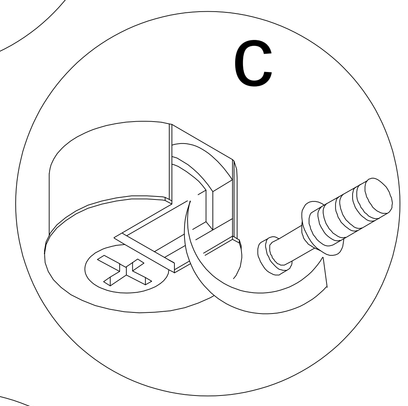

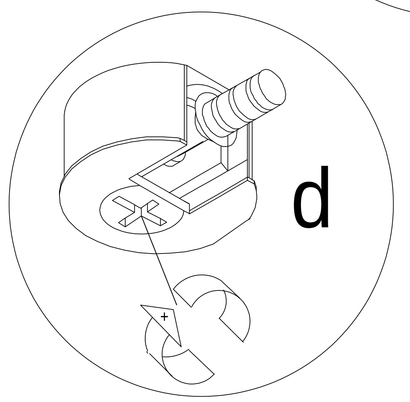

N=8*

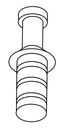

22

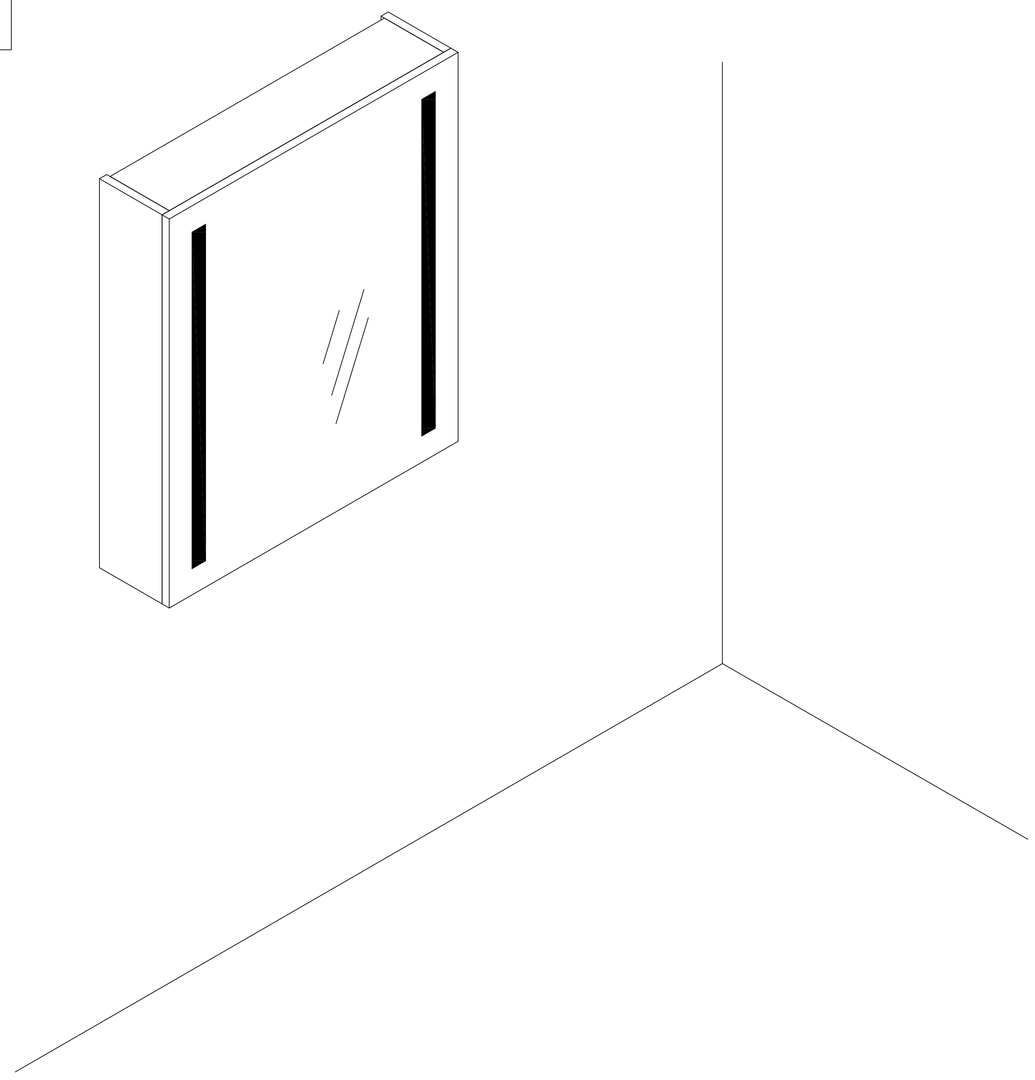

OK!

YS-GT5070

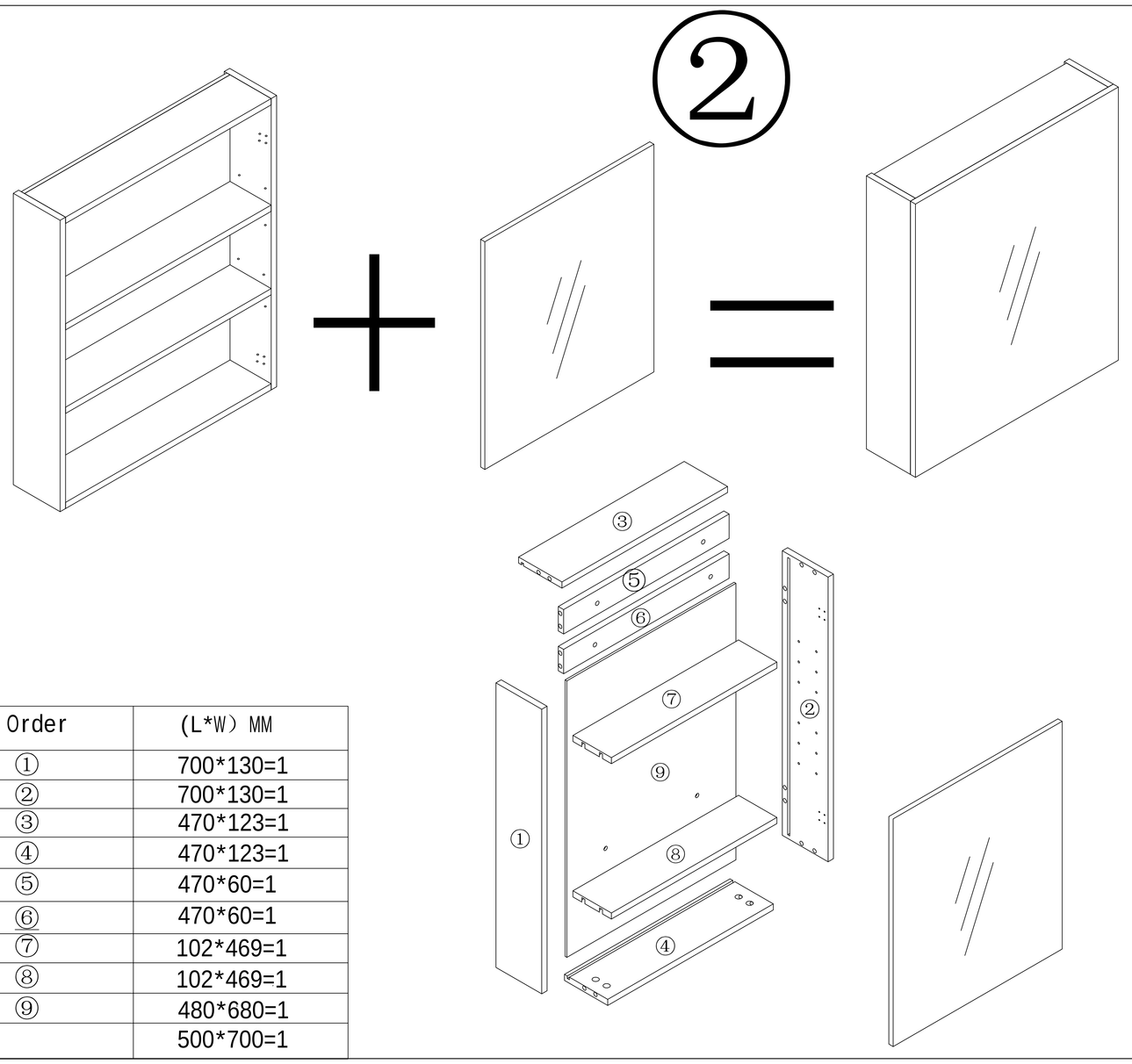

Order	(L*W) MM
①	700*130=1
②	700*130=1
③	470*123=1
④	470*123=1
⑤	470*60=1
⑥	470*60=1
⑦	102*469=1
⑧	102*469=1
⑨	480*680=1
	500*700=1

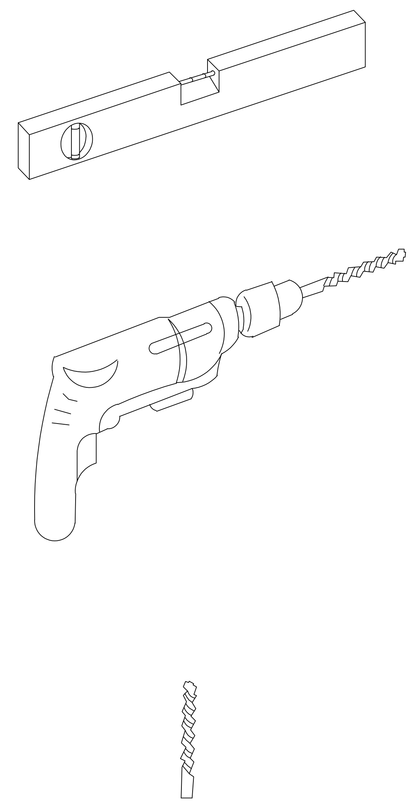

3mm-3.2mm

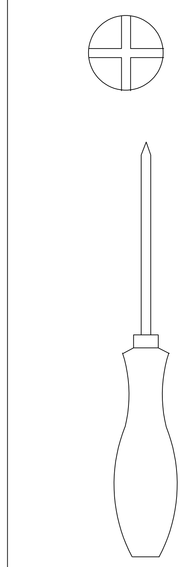

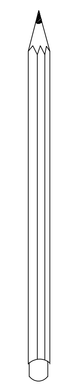

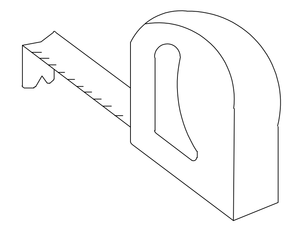

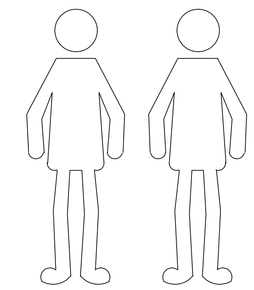

A

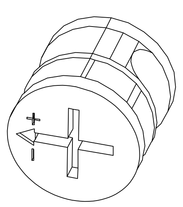

∅15*13mm
=16

V

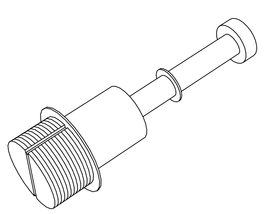

∅8*40mm
=16

N-N

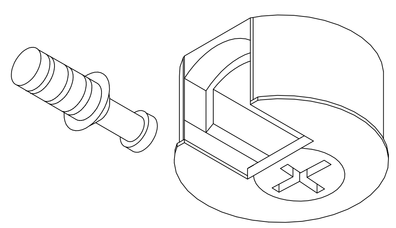

ϕ20*10mm
=8

F

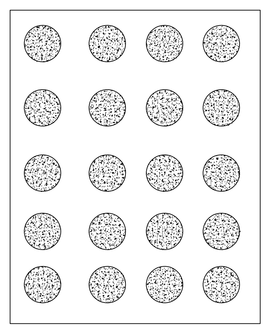

∅20*0.3mm=16

K

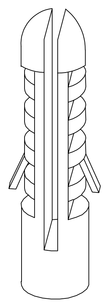

∅10*43mm
=4

L

∅6*70mm
=4

G-B

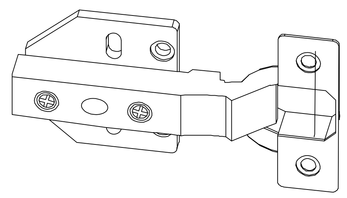

DTC-C80
=2

I

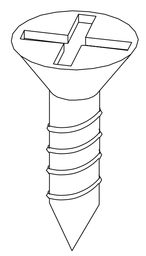

4*14mm
=12

J

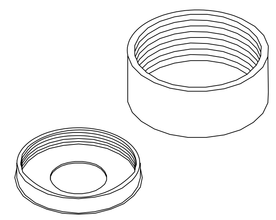

∅20*8mm
=4

1

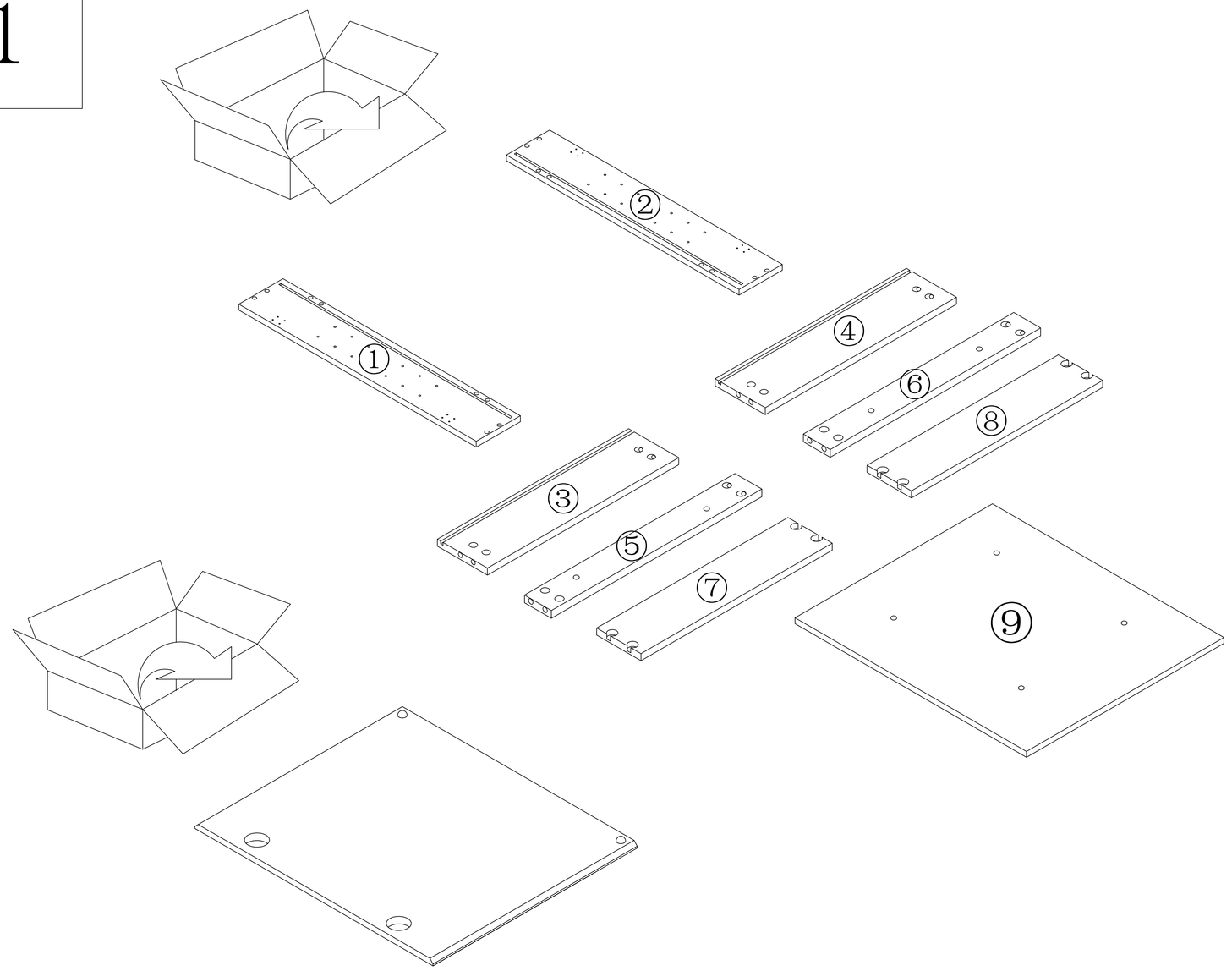

2

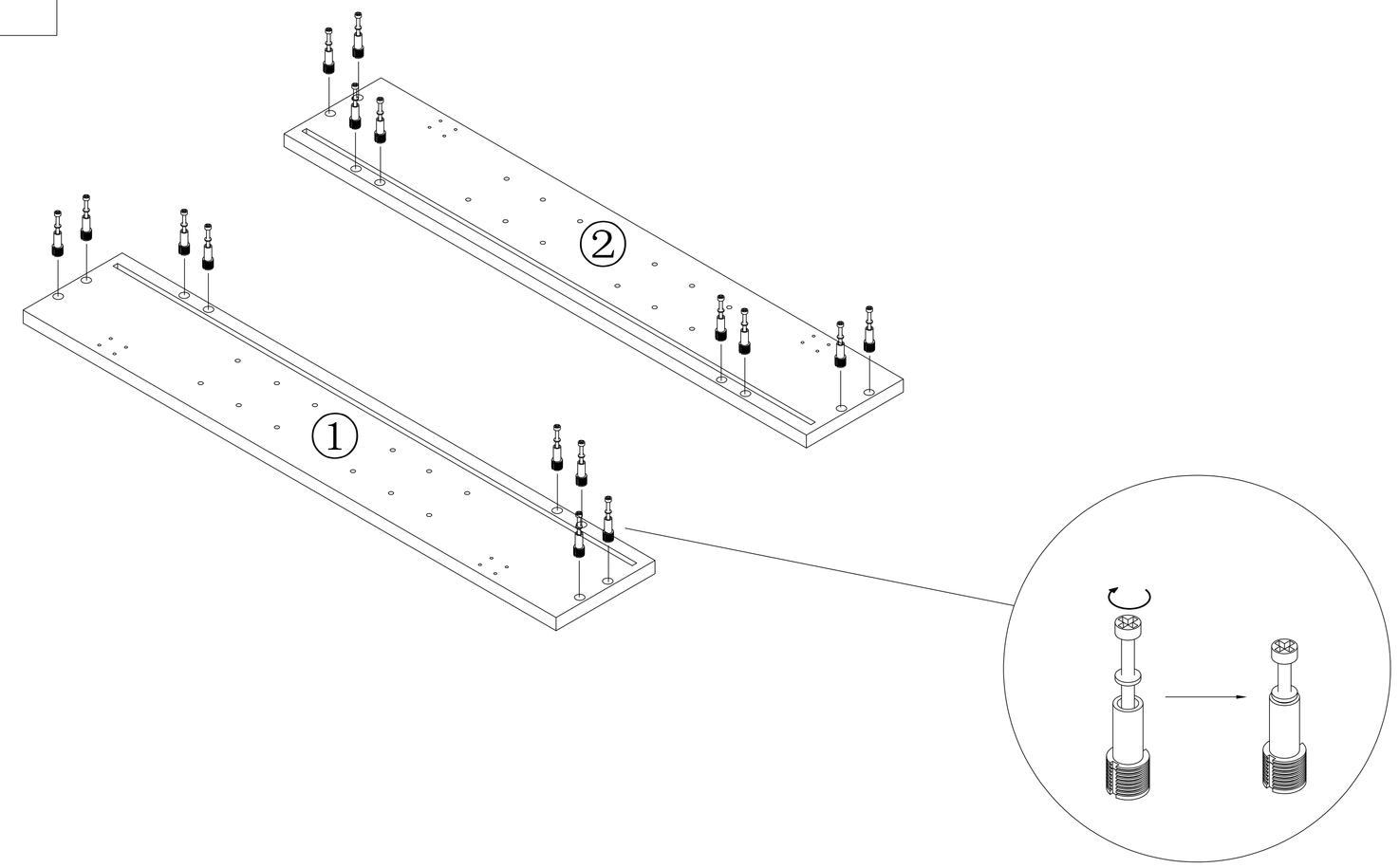

V=16*

3

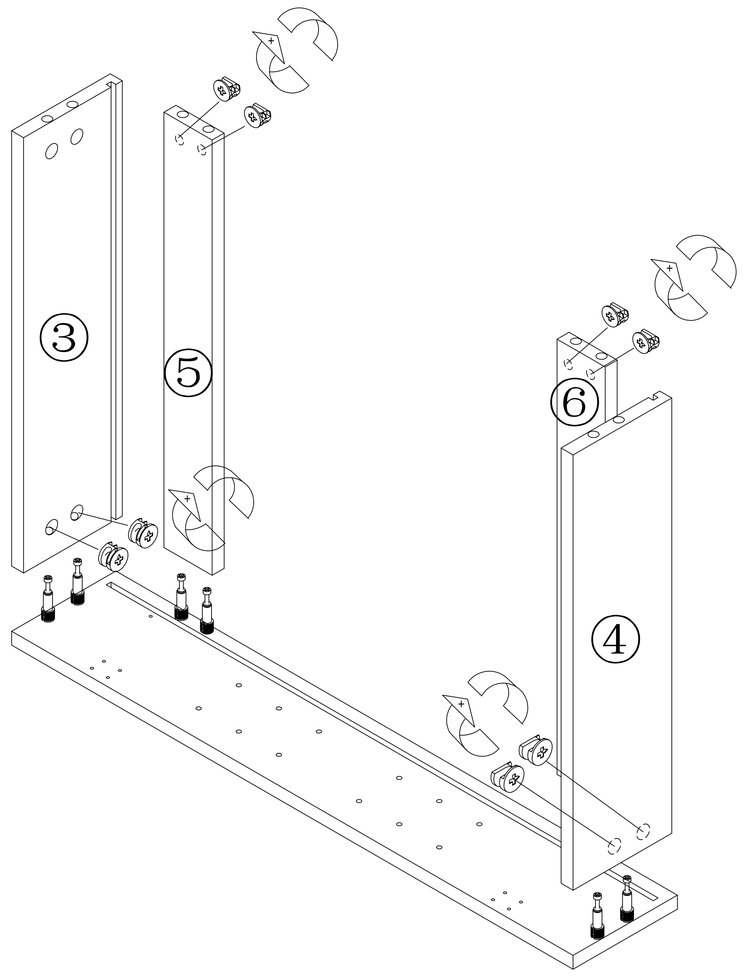

A=8*

4

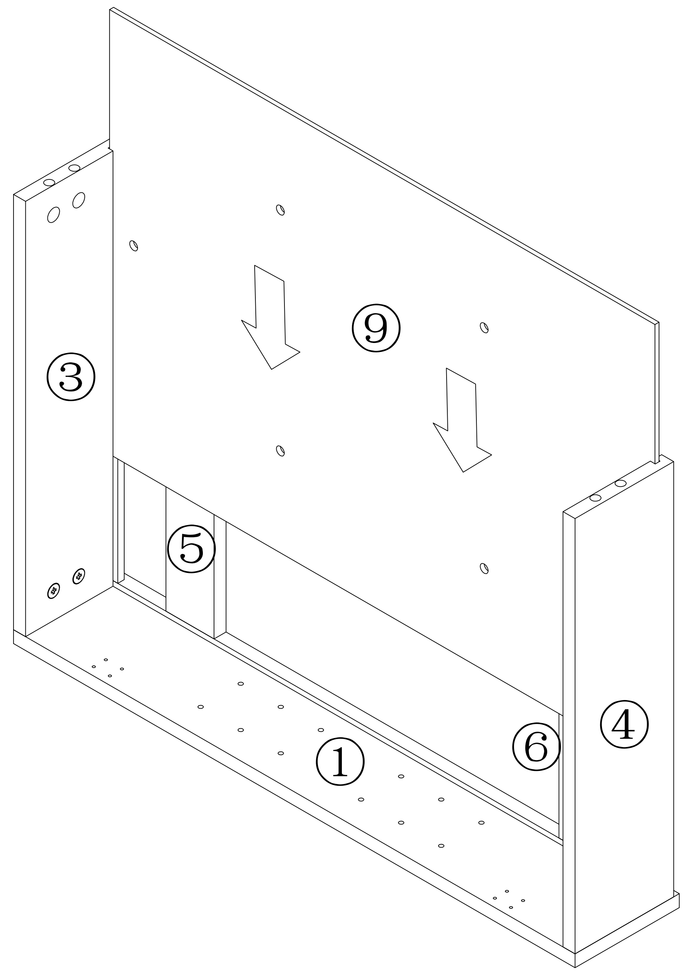

5

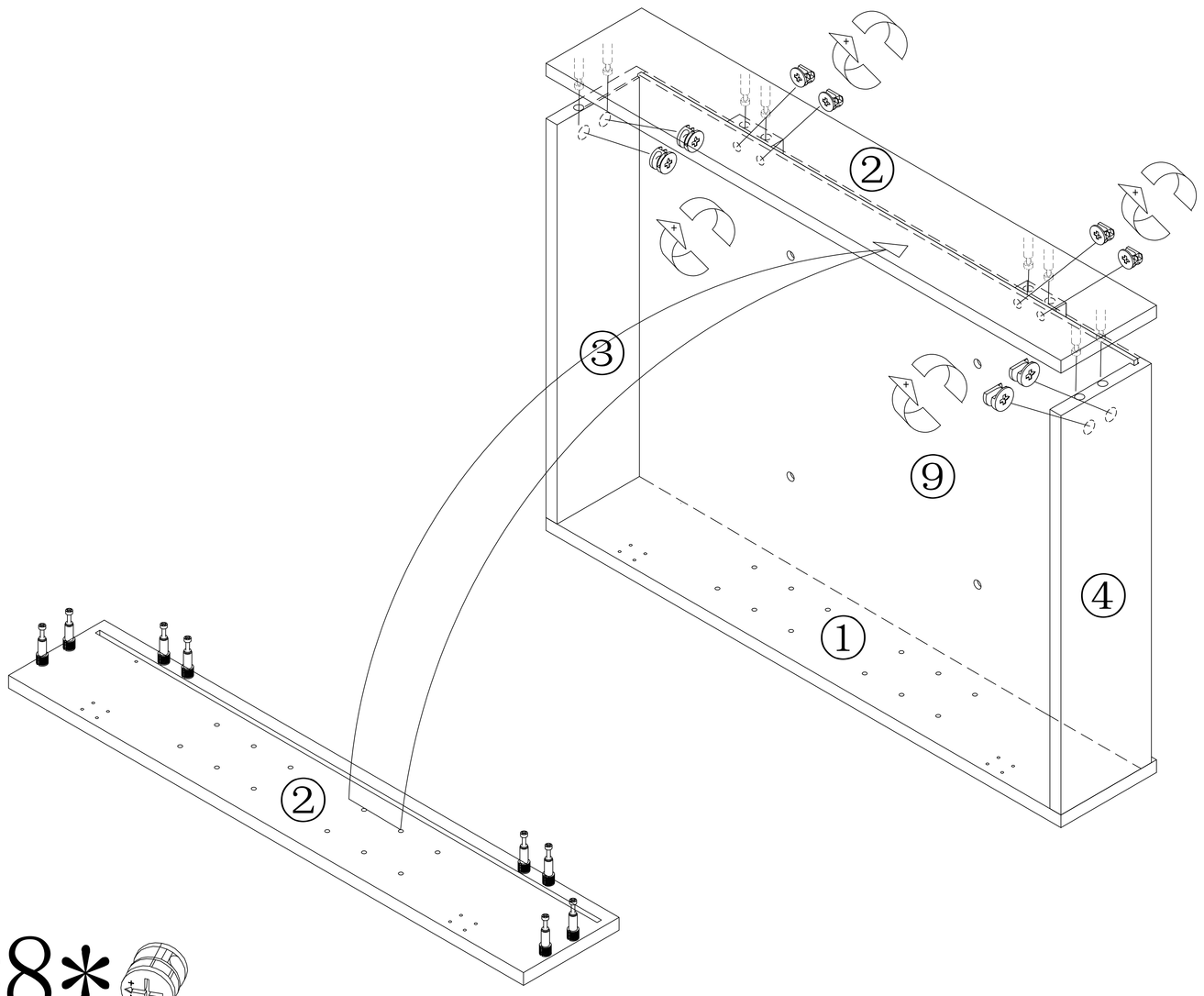

A=8*

7

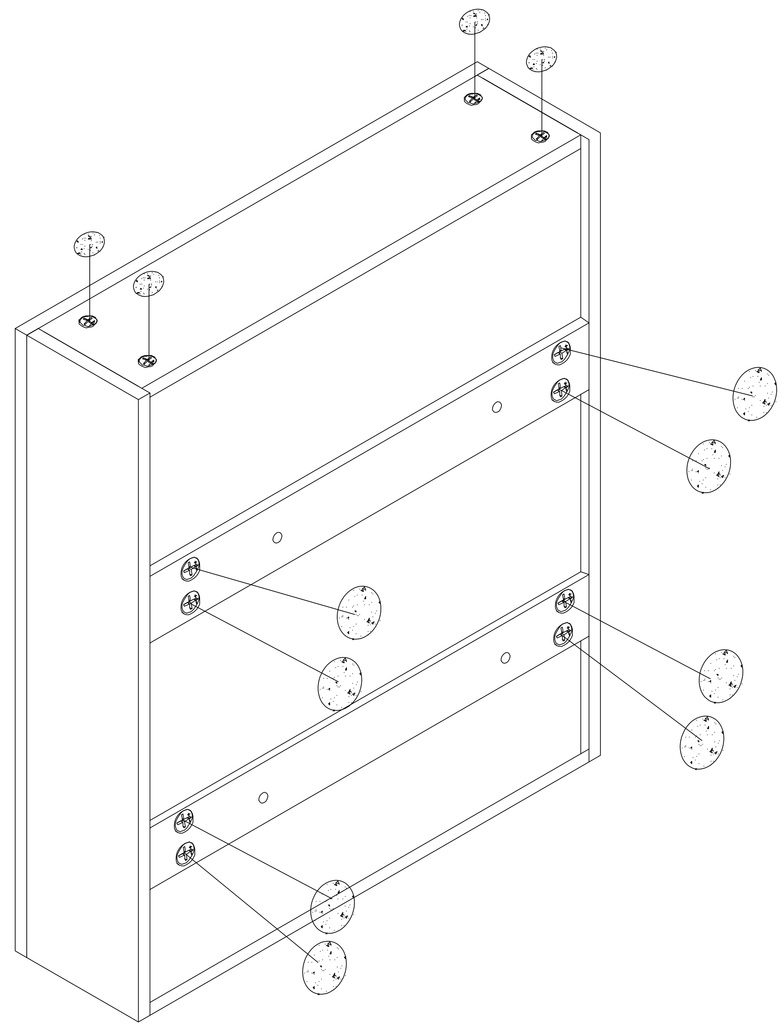

F=16

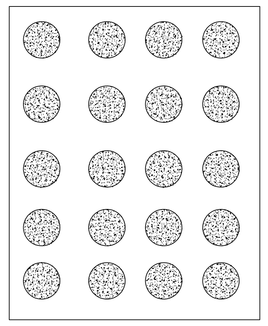

6

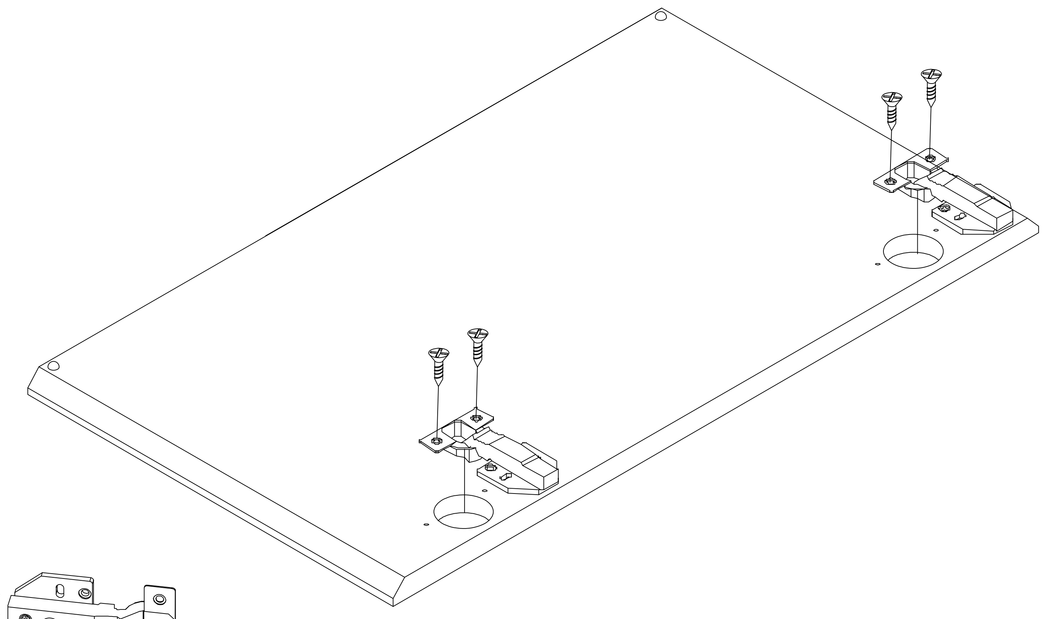

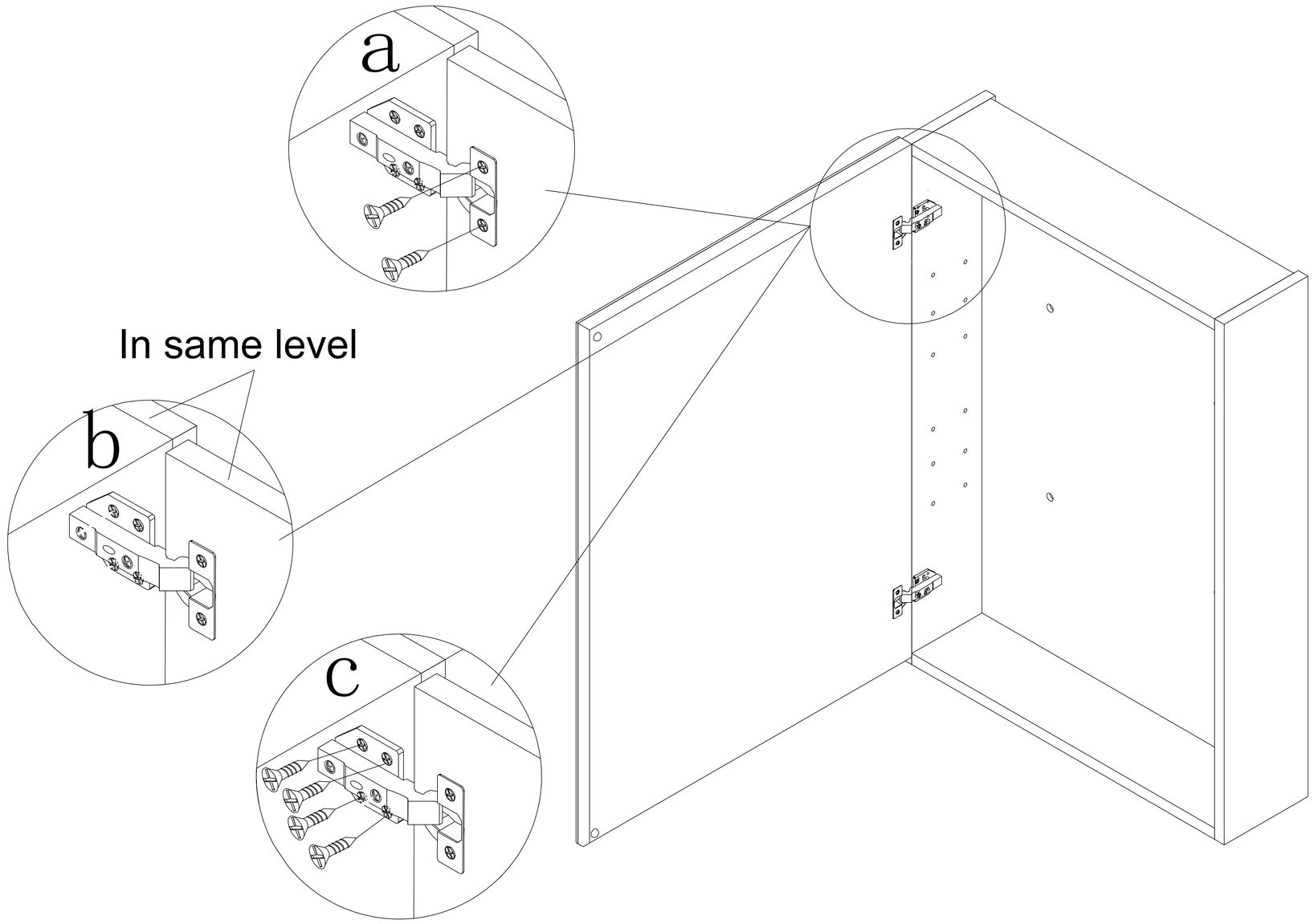

G-B=2*

I=12*

9

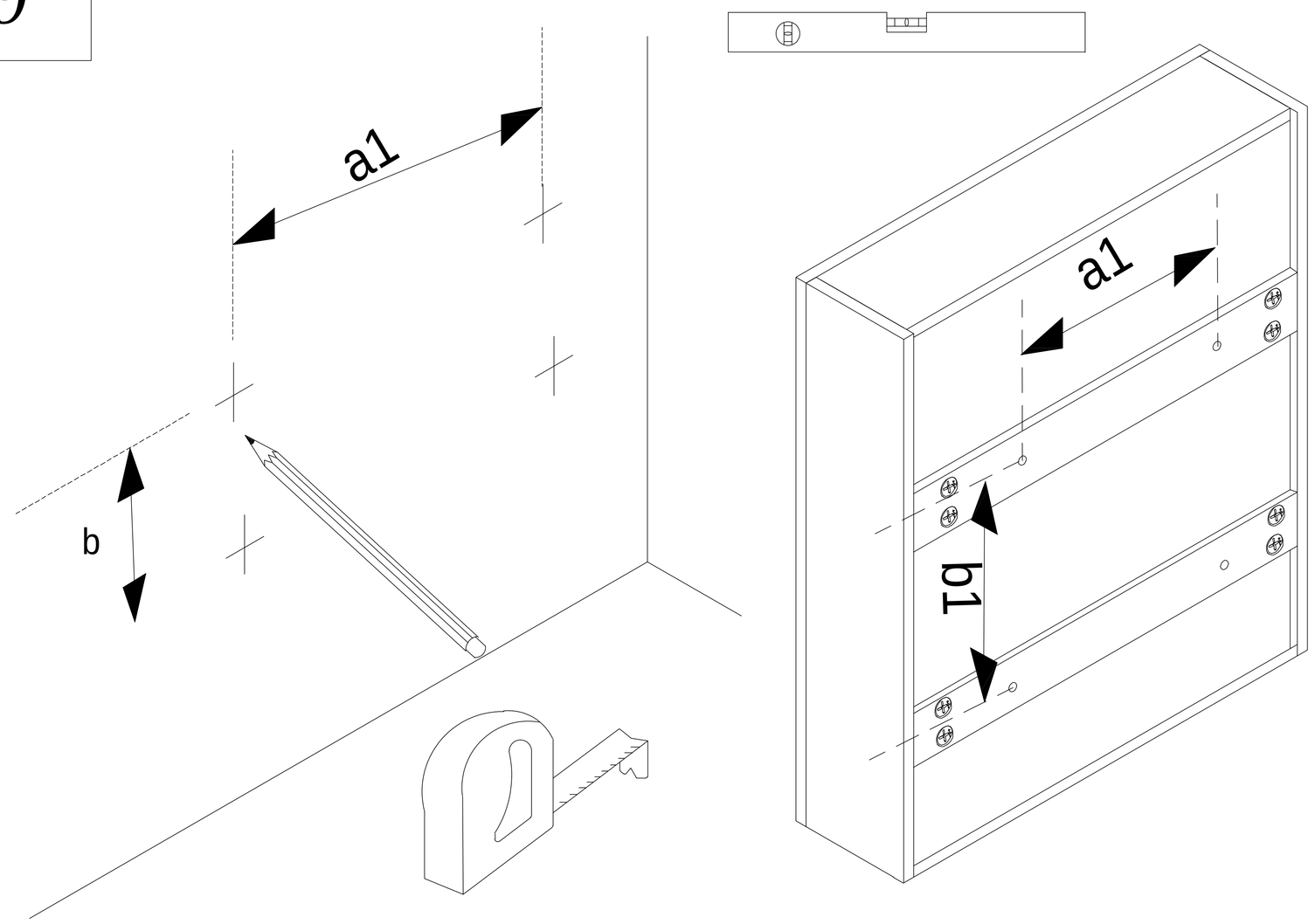

10

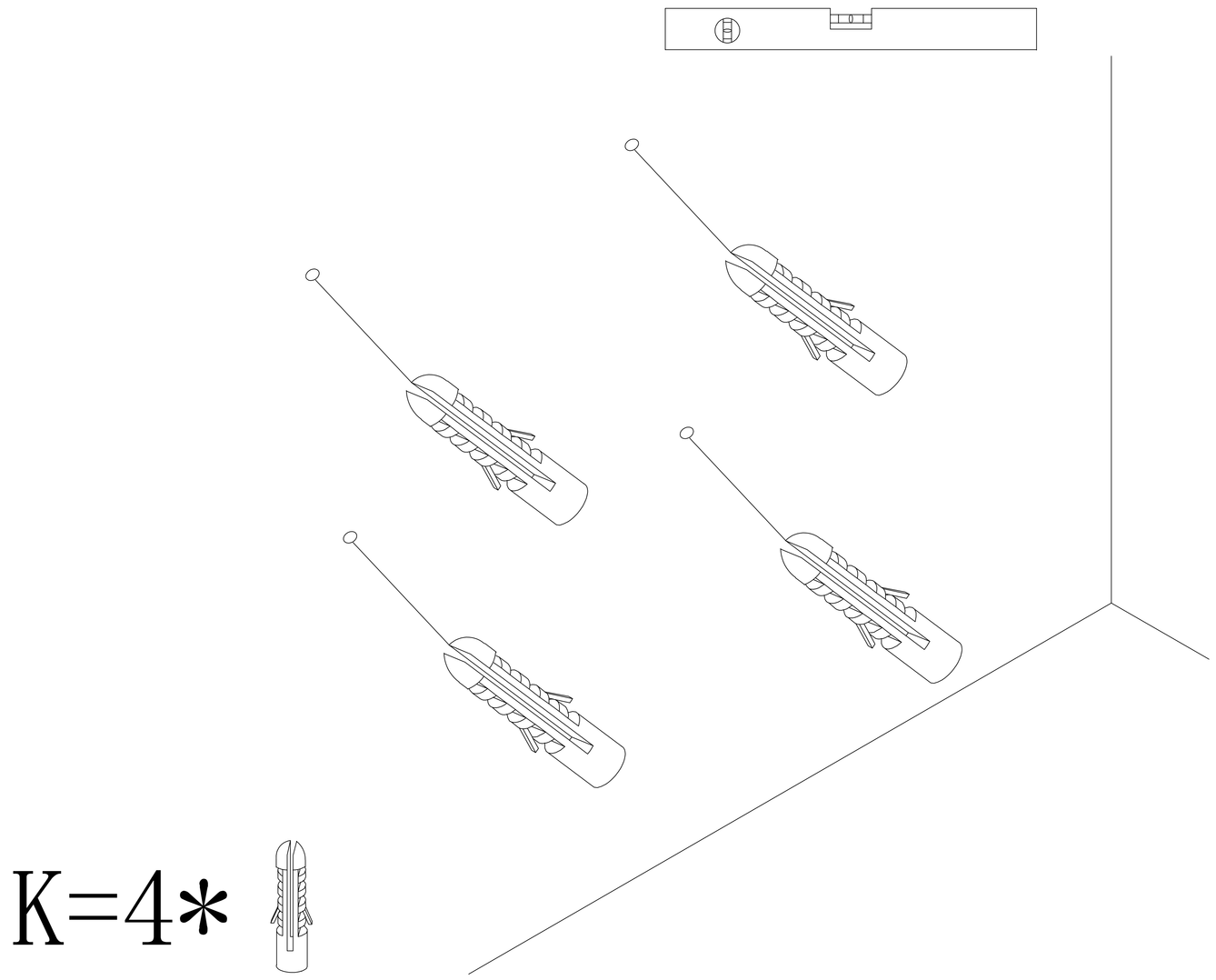

11

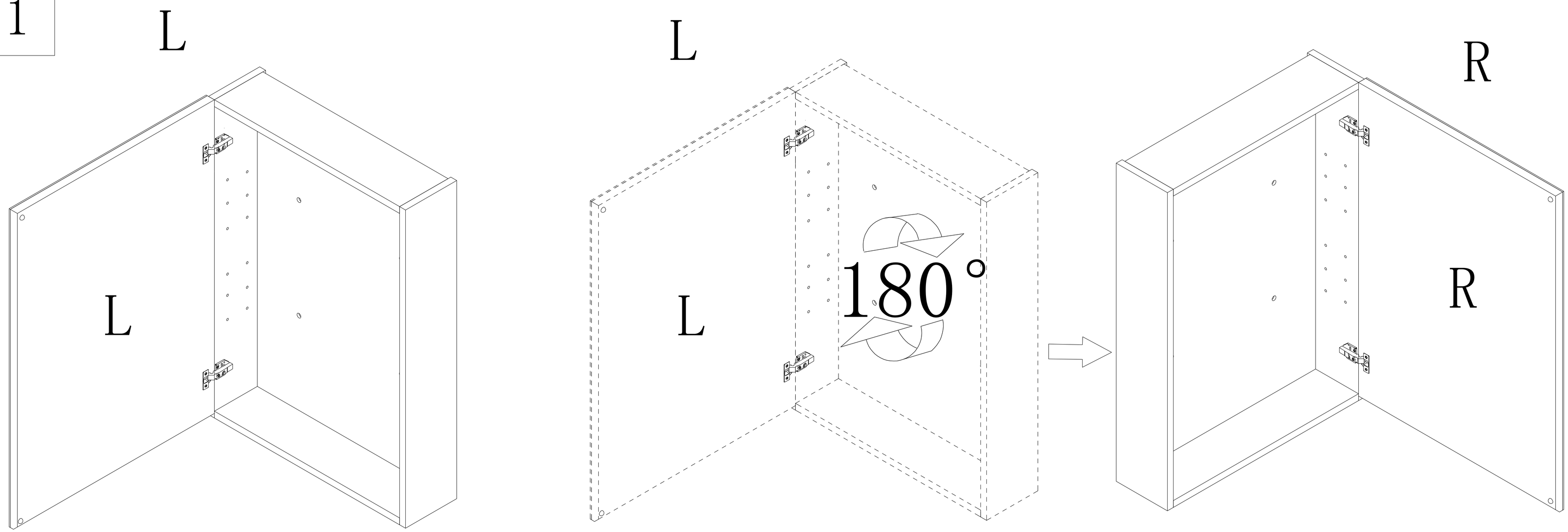

12

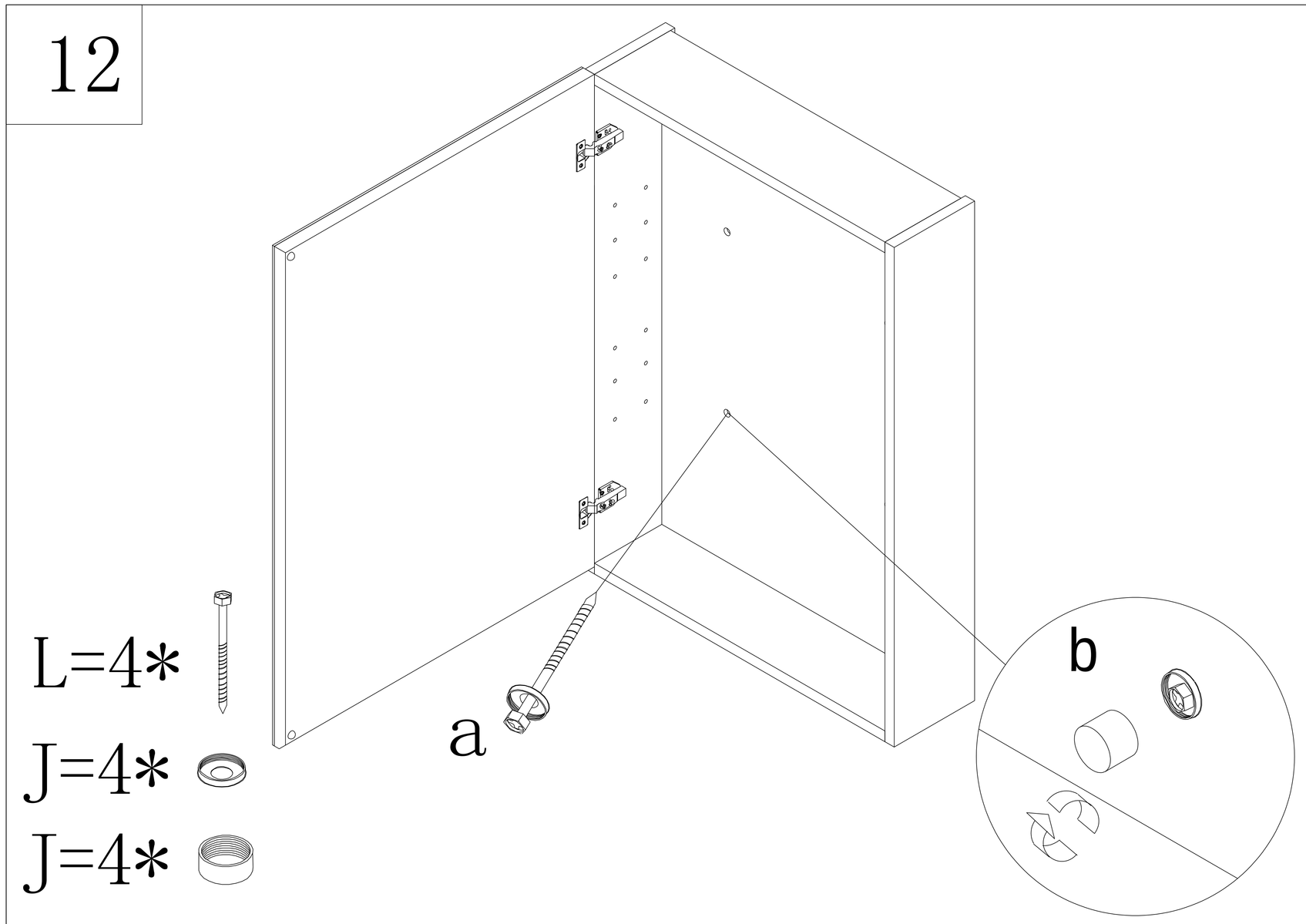

14

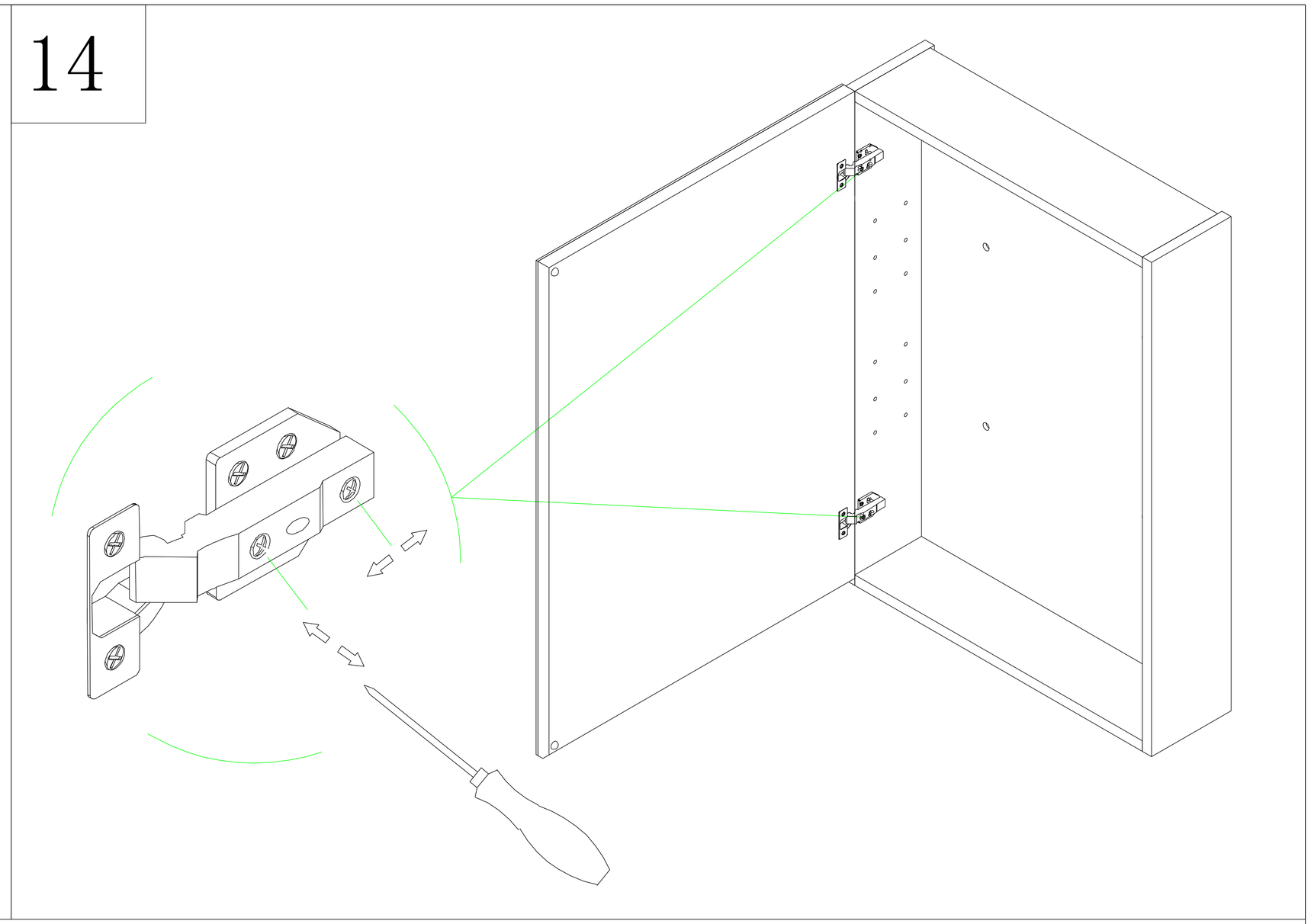

13

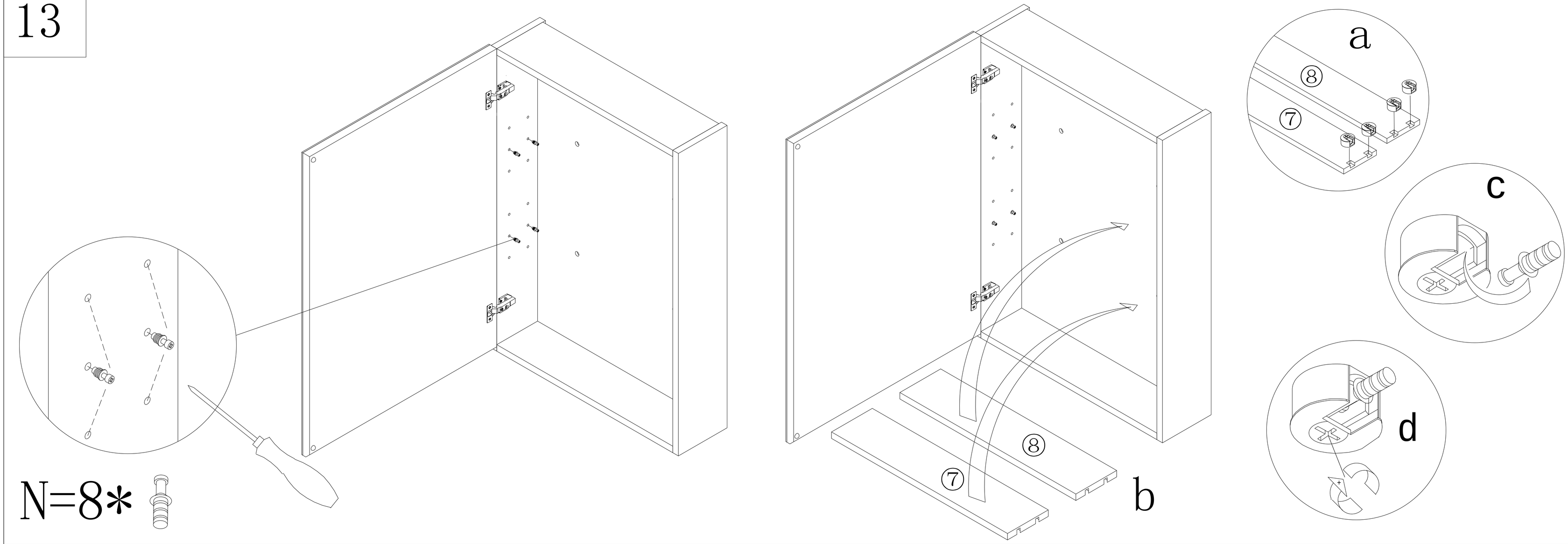

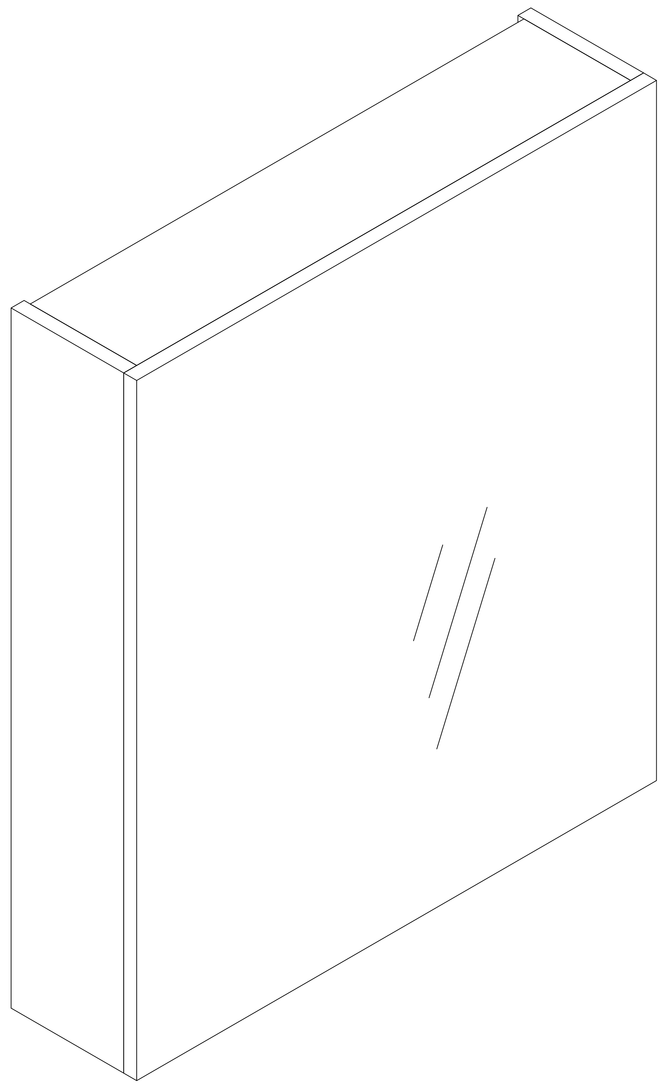

OK!