AZZANELLO

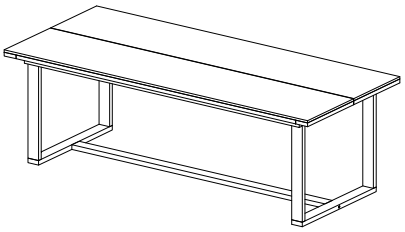

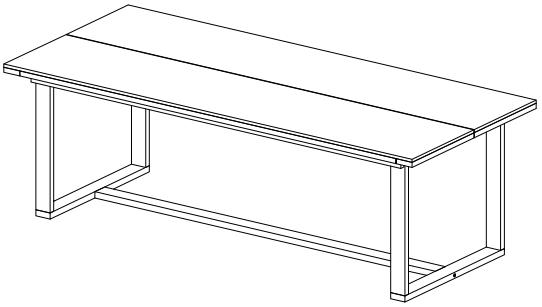

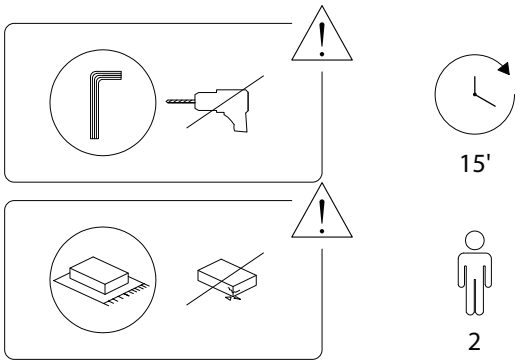

1/3

2029/AZZANELLO/240125/

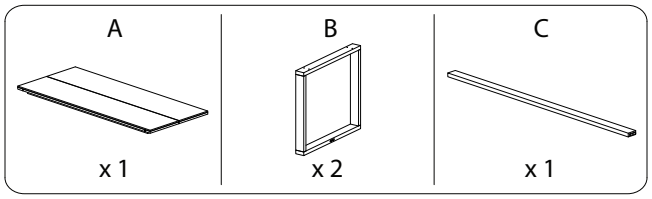

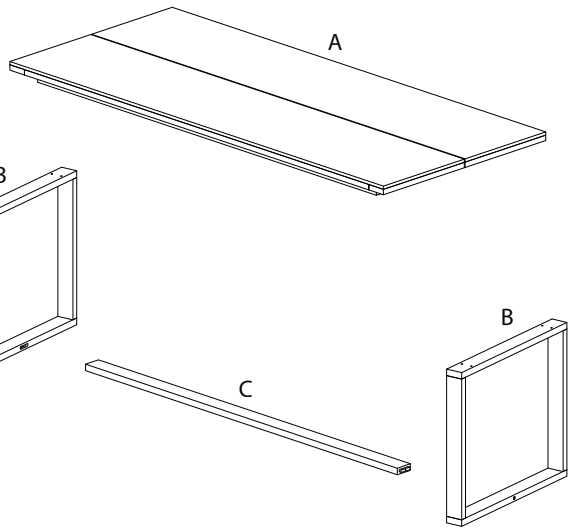

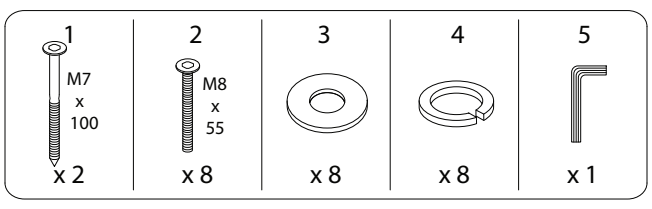

2/3

2029/AZZANELLO/240125/

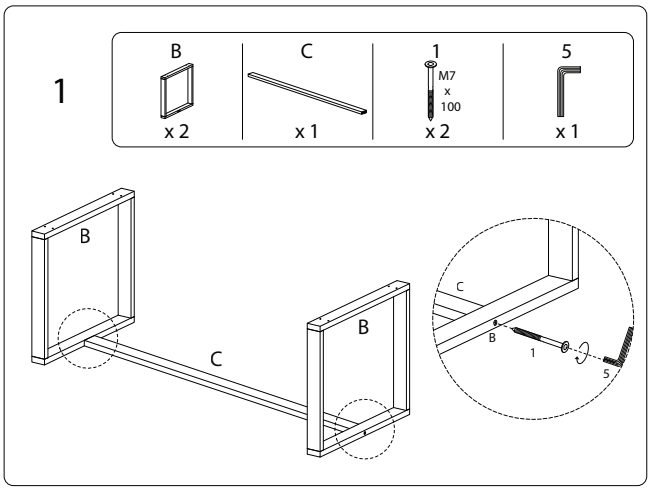

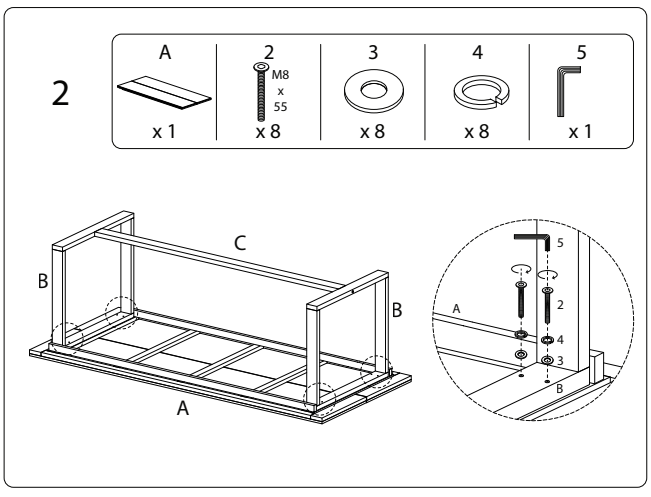

3/3

2029/AZZANELLO/240125/