BELLANO

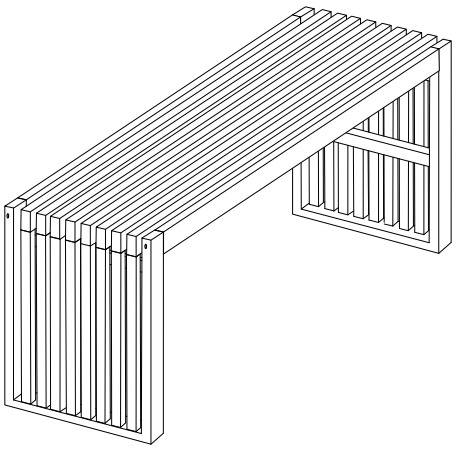

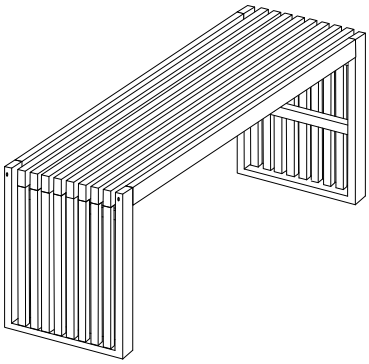

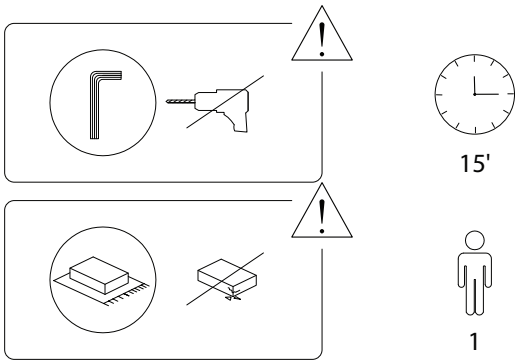

1/3

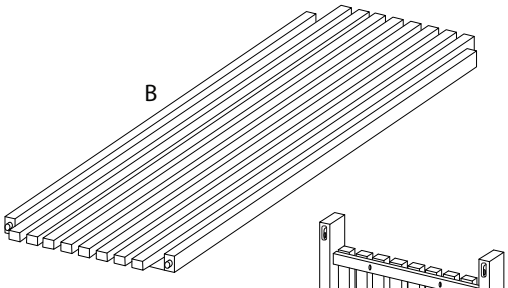

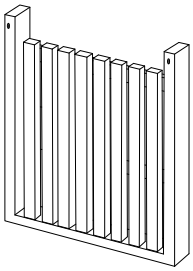

A x 2

A	B	1	2	3
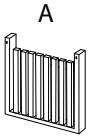	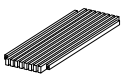	 M7 x 90	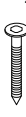 M6 x 40	
x 2	x 1	x 4	x 4	x 1

2/3

1

A	B	1	3
		 M7 x 90	
x 2	x 1	x 4	x 1

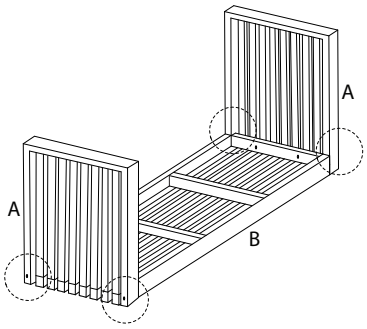

2

2	3
 M6 x 40	
x 4	x 1

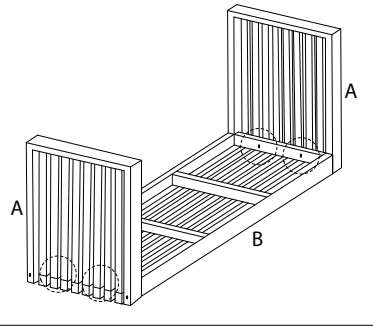

3/3