DOM85-3 165x80 12,5mm

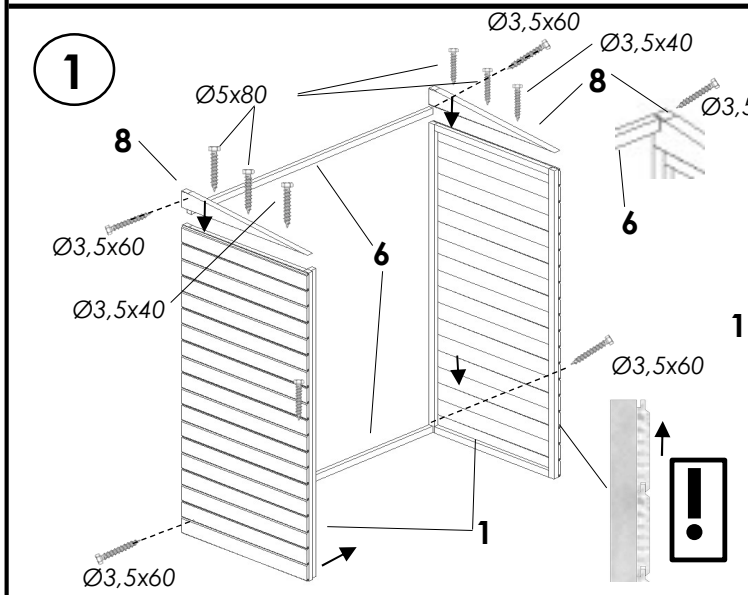

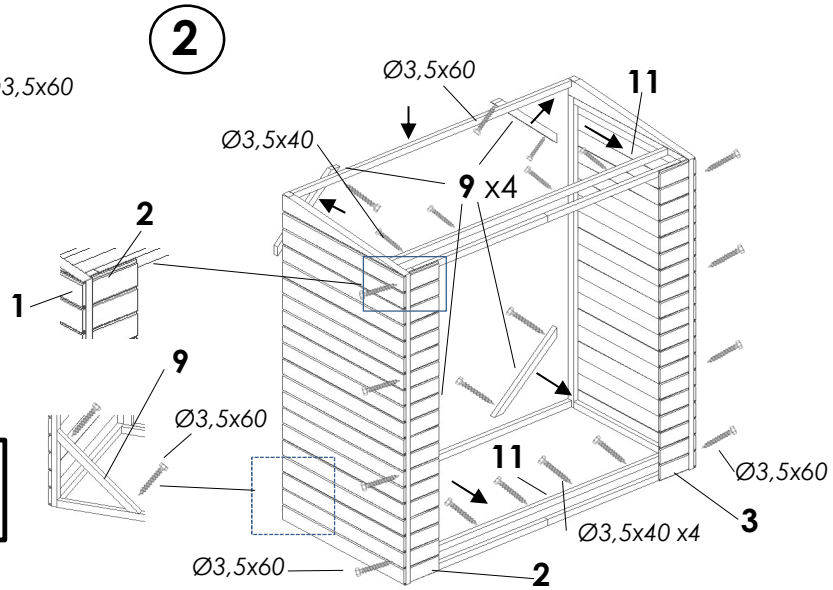

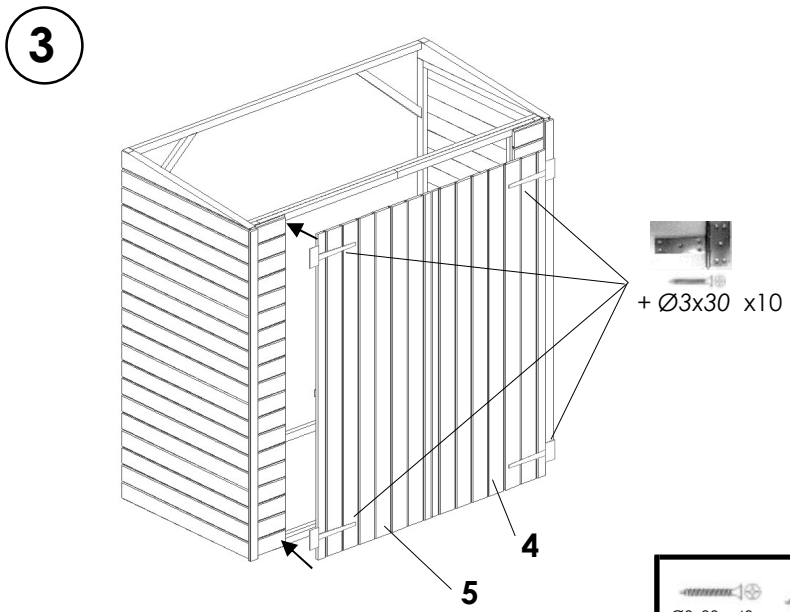

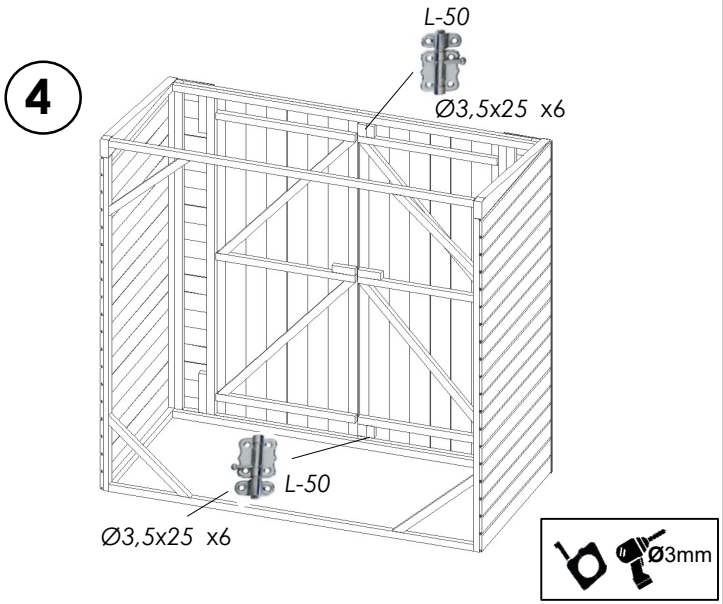

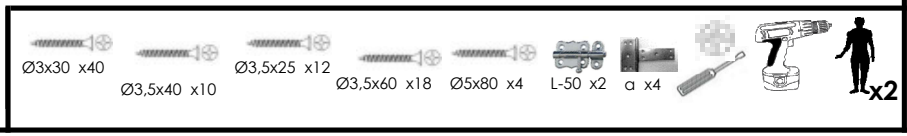

1	38x790x1700	x2
2	38x790x1700	x1
3	38x790x1700	x1
4	38x619x1670	x1
5	38x619x1670	x1
6	25x35x1580	x4
7	25x35x420	x4
8	38x90x790	x2
9	12,5x96x880	x20
10	13x22x880	x4
11	13x45x1790	x2
12	13x45x1700	x2
13	13x45x880	x2
14	13x45x810	x2
15	3x1000x2000	x1

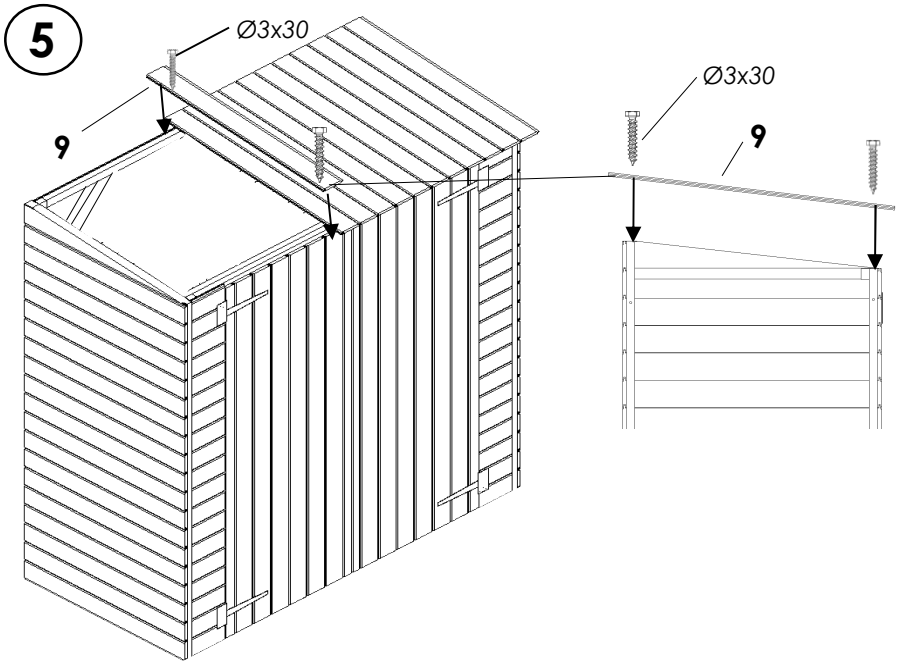

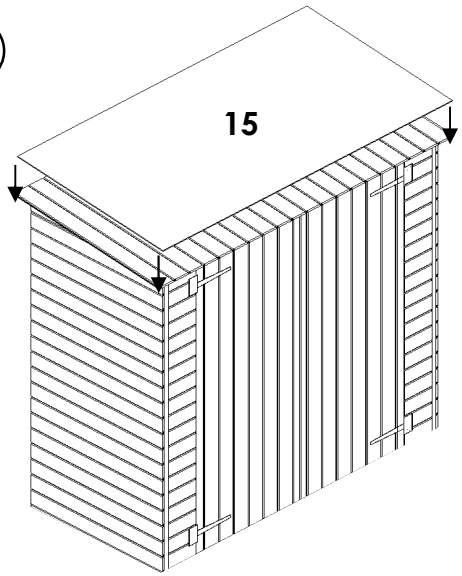

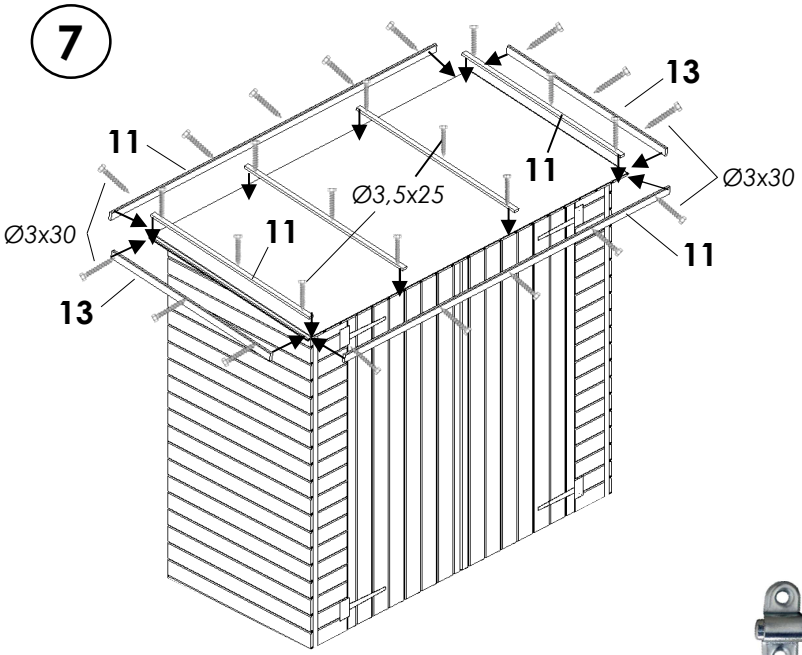

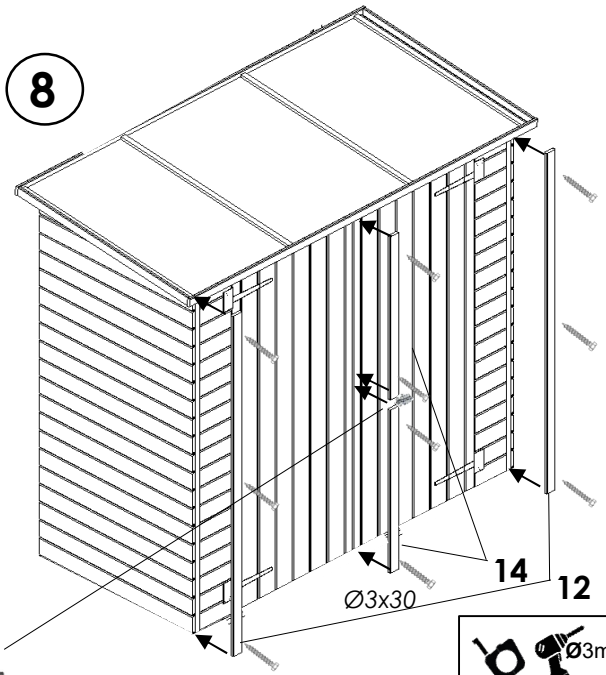

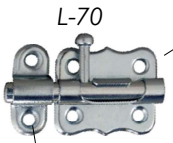

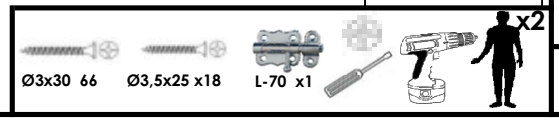

1	38x790x1700	x2
2	38x790x1700	x1
3	38x790x1700	x1
4	38x619x1670	x1
5	38x619x1670	x1
6	25x35x1580	x4
7	25x35x420	x4
8	38x90x790	x2
9	12,5x96x880	x20
10	13x22x880	x4
11	13x45x1790	x2
12	13x45x1700	x2
13	13x45x880	x2
14	13x45x810	x2
15	3x1000x2000	x1