BARATTI

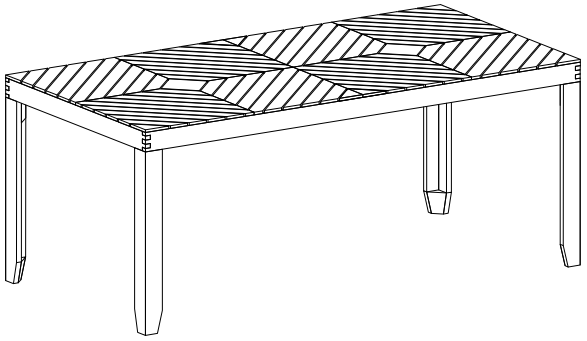

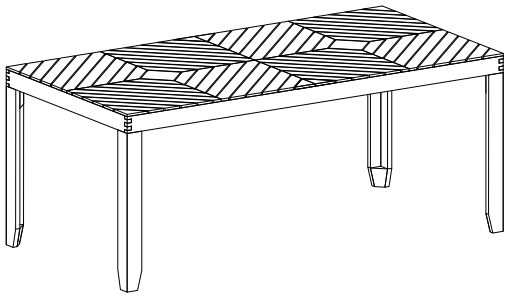

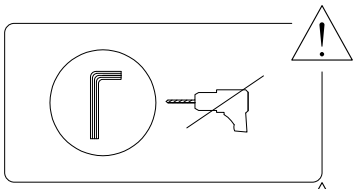

20'

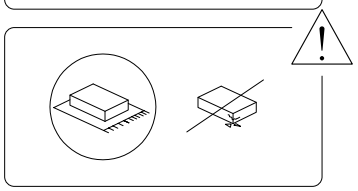

2

1/3

572/BARATTI/130923/

A

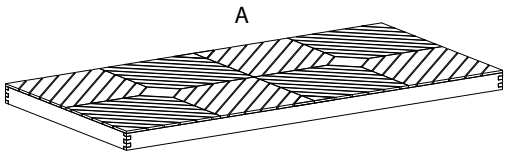

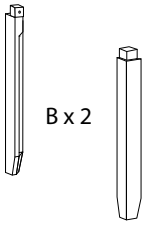

B x 2

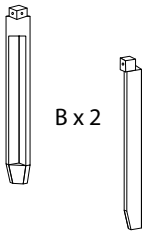

B x 2

A	B	C	D
	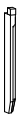	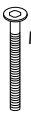 M8 x 65	
x 1	x 4	x 8	x 1

2/3

572/BARATTI/130923/

1

A	B	C	D
		 M8 x 65	
x 1	x 4	x 8	x 1

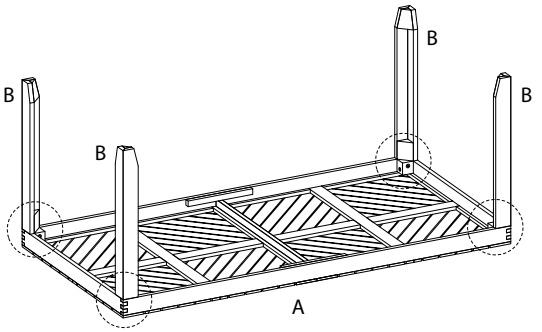

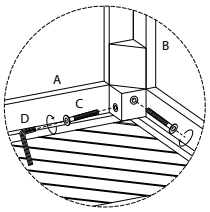

3/3

572/BARATTI/130923/