Sirius 2.0

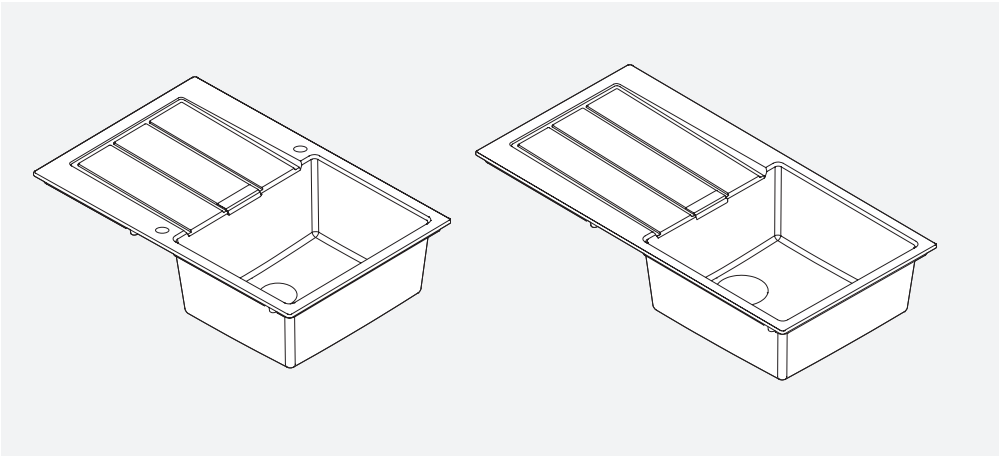

S2D SLIM 611-62
S2D SLIM 611-78
S2D SLIM 611-78 XL

S2D 611-62 (500)
S2D 611-78 (500)
S2D 611-78 XL (500)

S2D 611-100 (500)
S2D 620 (500)
S2D 621 (500)

S2D 651-78 (500)
S2D 651-100 (500)

EN	Installation and user manual	Sinks, Tectonite
DE	Installations- und Gebrauchsanweisung	Spüle, Tectonite
FR	Manuel d'installation et mode d'emploi	Eviers, Tectonite
NL	Installatie- en gebruikershandleiding	Spoeltafels, Tectonit
IT	Manuale per l'installazione e l'uso	Lavelli, Tectonite
ES	Manual de instalación y servicio	Fregaderos, Tectonite
PT	Manual de instalação e de assistência	Lava-louças, Tectonite
EL	Εγκατάσταση και εγχειρίδιο συντήρησης	Νεροχύτες, Tectonite
DA	Installations- og servicevejledning	Vaske, Tectonit
NO	Installasjons- og servicemanual	Vasker, Tectonitt
SV	Installations- och servicehandbok	Tvättställ, Tectonite
CS	Montážní a servisní návod	Dřezy, Tectonite
PL	Instrukcja montażu i obsługi	Zlewozmywaki, Tektonit
SK	Návod na inštaláciu a obsluhu	Drezy, Tectonit
RO	Manual de instalare și service	Chiuvete, Tectonite
BG	Ръководство за монтаж и обслужване	Мивки, Tectonite
UK	Посібник зі встановлення та обслуговування	Мийки з Тектоніту
RU	Руководство по установке и обслуживанию	Мойки из Тектонайта
TR	Kurulum ve kullanım kılavuzu	Evyeler, Tectonit
ZH	安装和维修手册	水槽, 构造岩
AR	دليل التركيب والاستعمال	أحواض Tectonite

FRANKE

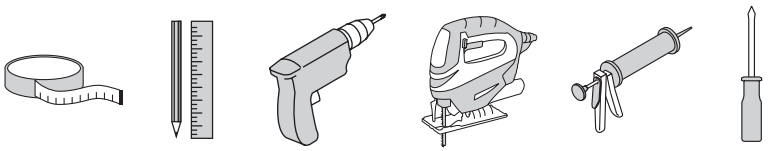

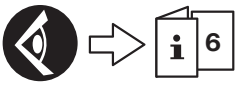

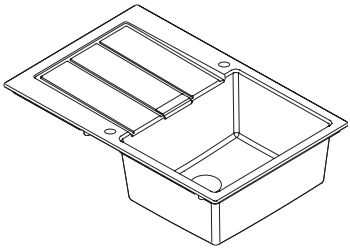

1

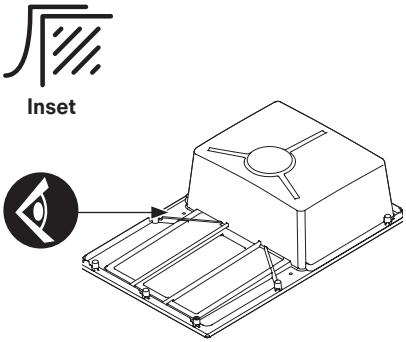

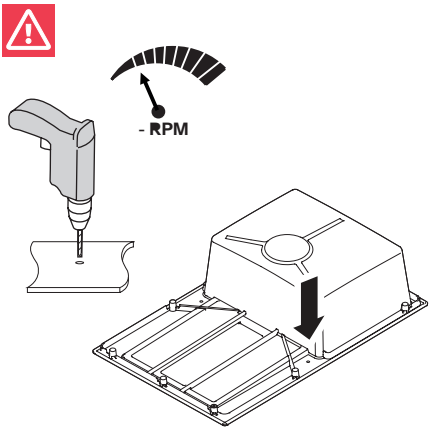

2

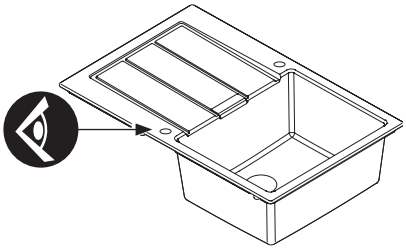

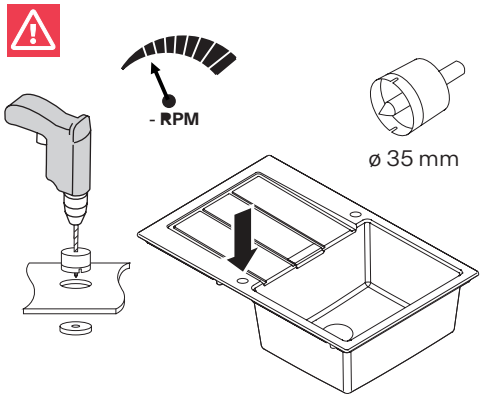

1

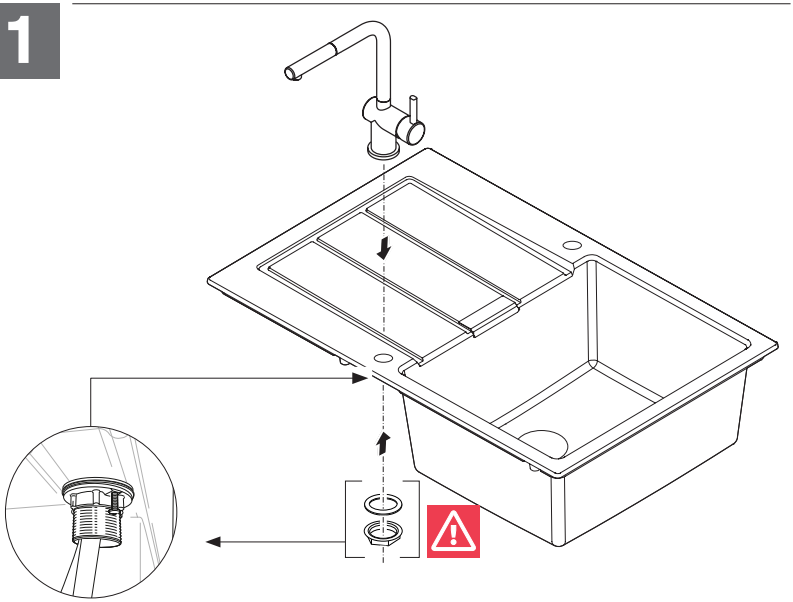

2

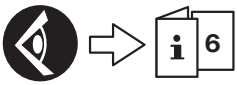

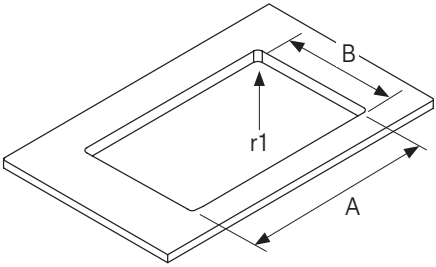

3

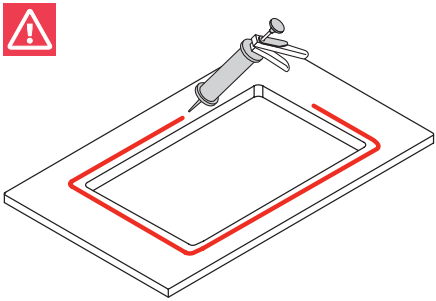

4

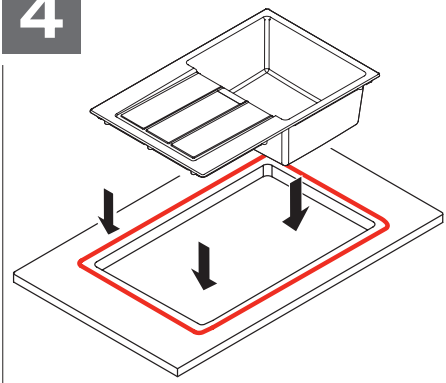

5

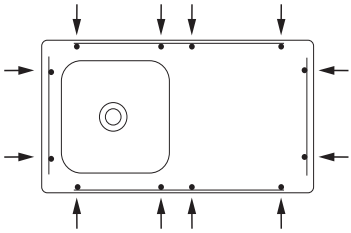

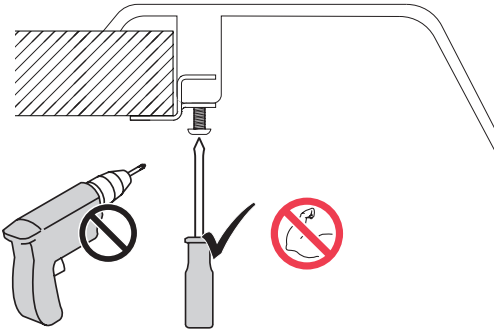

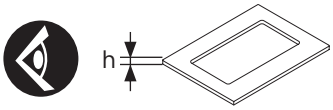

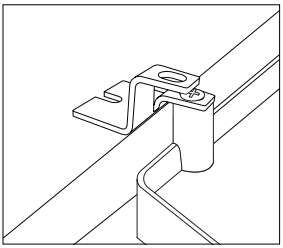

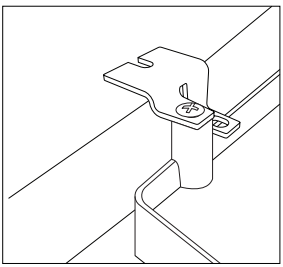

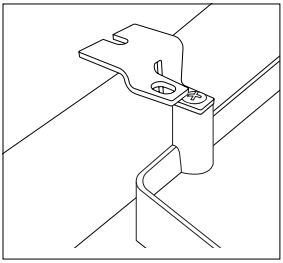

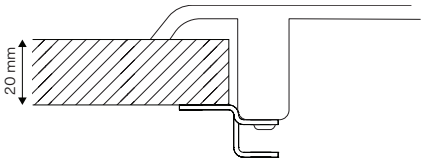

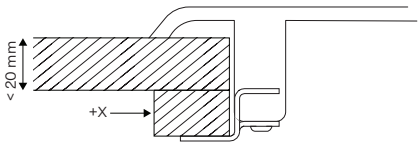

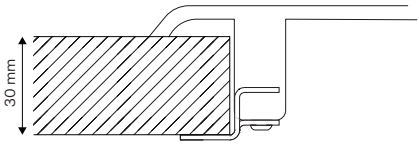

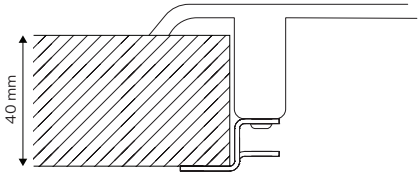

6

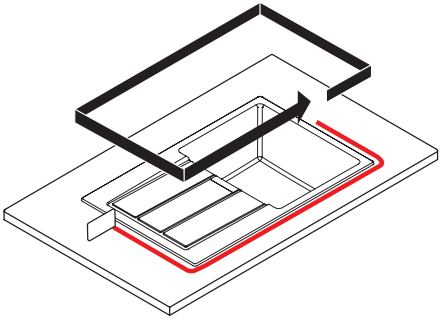

7

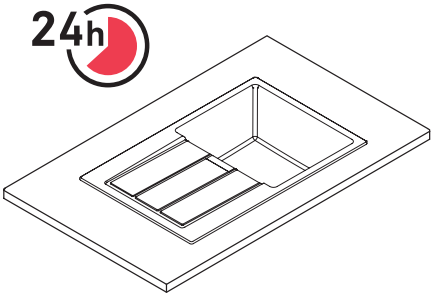

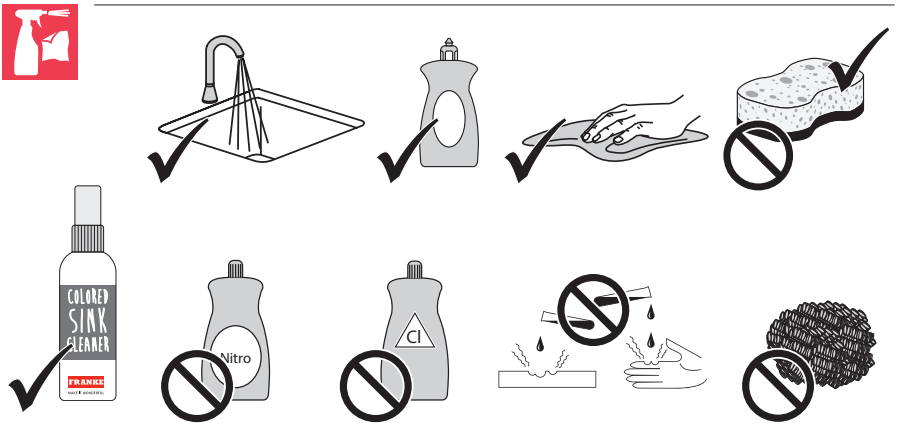

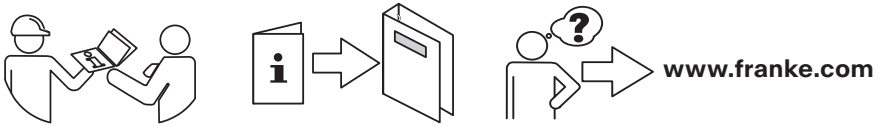

Inset

Model		A	B	r1	minimum cabinet
S2D SLIM 611-62		604±2	419±2	7,5	450
S2D SLIM 611-78	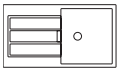	764±2	419±2	7,5	450
S2D SLIM 611-78 XL	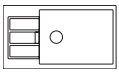	764±2	419±2	7,5	600
S2D 611-62 (500)		604±2	484±2	7,5	450
S2D 611-78 (500)	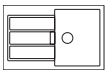	764±2	484±2	7,5	450
S2D 611-78 XL (500)	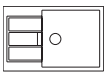	764±2	484±2	7,5	600
S2D 611-100 (500)	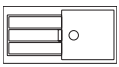	984±2	484±2	7,5	600
S2D 620	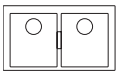	844±2	484±2	7,5	800
S2D 621	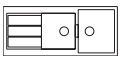	1144±2	484±2	7,5	800
S2D 651-78	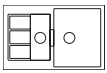	764±2	484±2	7,5	600
S2D 651-100	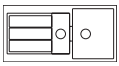	984±2	484±2	7,5	600

Argentina
Industrias Spar
San Luis S.A.
Buenos Aires 1008
Phone +54 11 4311 7655

Australia
Franke Australia
83 Bangholme Road
Dandenong South VIC 3175
Phone: +61 3 9700 9100

Belgium
Franke N.V.
9400 Ninove
Phone +32 54 310 111

Brazil
Franke Sistemas de Cozinhas Ltda
Rua Dona Francisca,
no 8.300, Bloco N - Sala 49,
Condomínio Perini Business Park, bairro Distrito Industrial
CEP: 89.219-600.
Joinville-SC
Phone 0800-4773000

Canada
Franke Kindred Canada Ltd.
Midland, ON L4R 4K9
Phone +1 866 687 7465

China
Franke (China) Kitchen Systems Co., Ltd.
Heshan, Guangdong,
529700
Phone 400 882 9898

Czech Republic
Franke s.r.o.
190 00 Praha 9
Phone +420 281 090 445

Denmark
Franke KS Denmark
8520 Lystrup
Phone +45 8624 9024

Egypt
Al Sharq for Ceramic and Porcelain - Mozdan
Nasr City, Cairo, Egypt
Phone +201000038122

Finland
Franke Finland Oy
76850 Naarajärvi
Phone +358 15 341 11

France
Franke France S.A.S.
60230 Chambly
Phone +33 130 289 400

Germany
Franke GmbH
79713 Bad Säckingen
Phone +49 7761 52 199

Greece
Franke Hellas S.A.
19003 Markopoulo Attikis (Athens)
Phone +30 22991 500 00

Hong Kong SAR
Franke Asia Hong Kong
Quarry Bay
Phone +852 3184 1900

India
Franke Faber India Private Limited
Pune 412208
Phone 1800 209 3484

Italy
Franke S.p.A.
37019 Peschiera del Garda
Toll-free number
800 359 359

Kazakhstan
Franke Kazakhstan Ltd.
040918 Almaty City
Phone +7 727 297 3812

New Zealand
Franke Australia
83 Bangholme Road
Dandenong South VIC 3175
Phone +64 9 964 0400

Norway
Franke KS Norway
8520 Lystrup, Denmark
Phone +47 35 566 450

Poland
Franke Polska Sp. z o.o.
05-090 Raszyn
Phone +48 22 711 6700

Portugal
Franke Portugal S.A.
2735-531 Cacém
Phone +351 21 426 9670

Romania
Franke Romania SRL
Pantelimon 077145
Phone +40 21 350 1550

Russia
Franke Russia GmbH
248033 Kaluga
Phone +8 800 555 1255

Singapore
Franke Singapore Pte Ltd
33 Ubi Ave 3,
01-38 Vertex
Phone +65 9838 2542

Slovak Republic
Franke Slovakia s.r.o.
013 24 Strečno
Phone +420 281 090 445

South Africa
Franke South Africa
Durban 4052
Phone +27 31 450 6300

Spain
Franke España S.A.U.
08174 Sant Cugat del Vallès
Phone +34 934 456 768

Sweden
Franke Futurum AB
930 47 Byske
Phone +46 912 405 00

Switzerland
Franke Küchentechnik AG
4663 Aarburg
Phone +41 800 583 243

Thailand
Franke (Thailand) Co., Ltd.
Bangkok 10110
Phone +66 2 013 7900

The Netherlands
Franke Nederland B.V.
5700 AD Helmond
Phone +31 492 585 111

Turkey
Franke Mutfak ve Banyo Sistemleri Sanayi ve Ticaret A.S.
41480 Gebze Kocaeli/ Turkey
Phone +90 262 644 6595

Ukraine
Franke Ukraina LLC
15-A Druzhby Narodiv Blvd
01042 Kyiv
Phone 0 800 301 801

United Arab Emirates
Phone +971 4 355 7196

United Kingdom
Franke UK Ltd.
Manchester M22 5WB
Phone +44 161 436 6280

USA
Franke Home Solutions North America, LLC
800 Aviation Pkwy
Smyrna, TN 37167
Phone 1 800 626 5771

© Franke Technology and Trademark Ltd., Switzerland | 2023-05-12 | V05 | 993.0615.019 | ID: 20172403

franke.com

FRANKE