ASSEMBLY INSTRUCTIONS

5200106

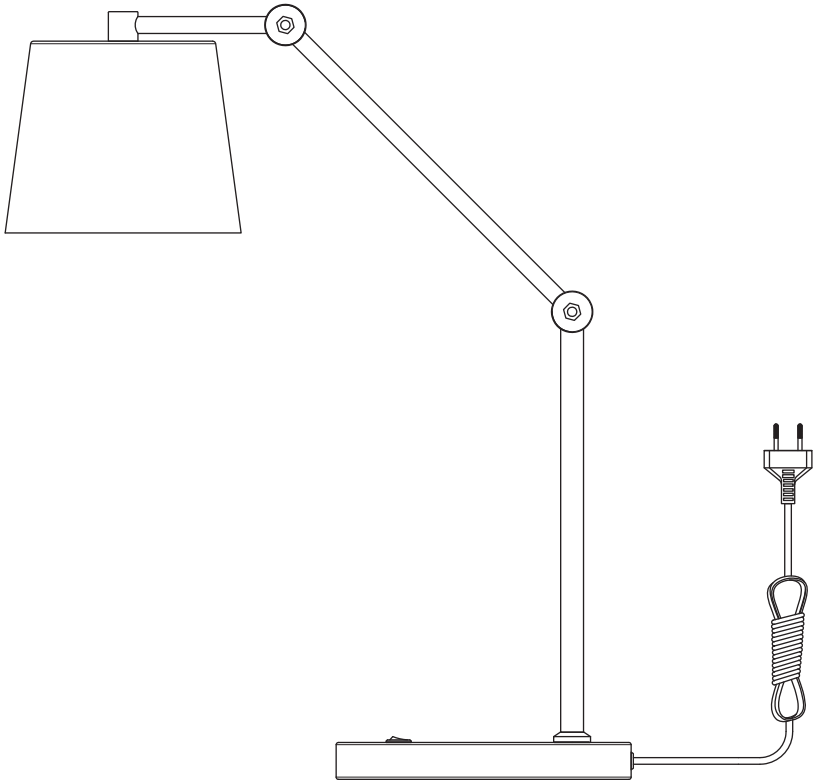

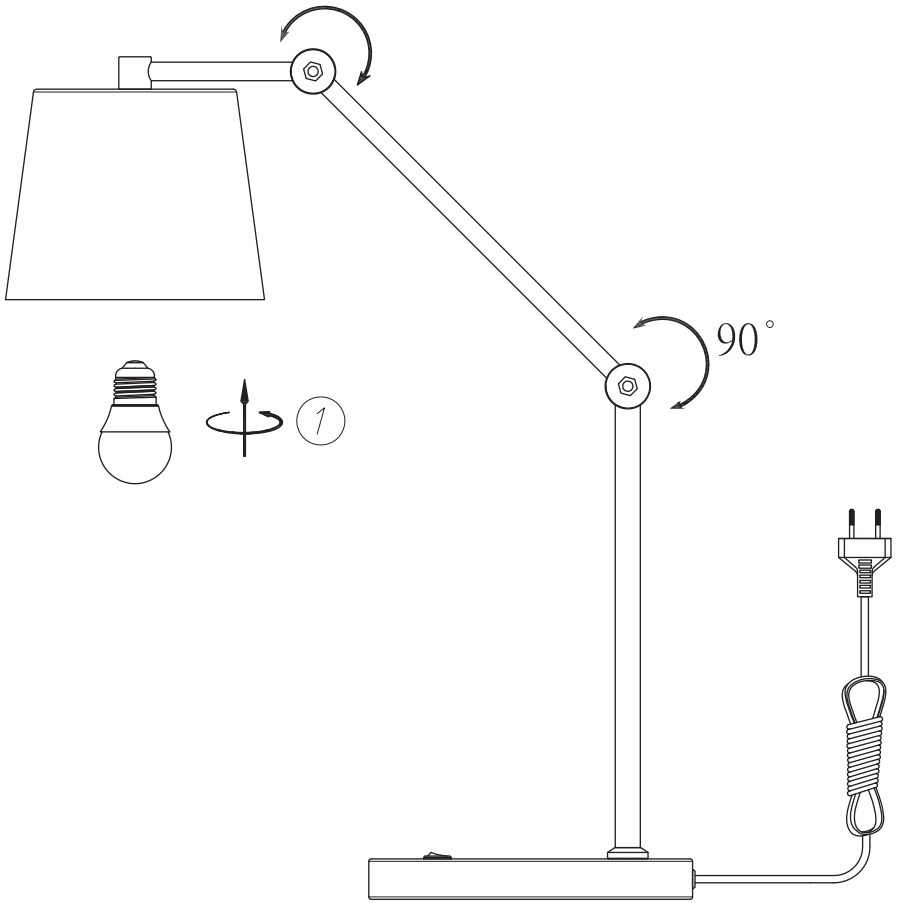

Caution : If the external flexible cable or cord of this luminaire is damaged, it should be replaced by a qualified person in order to avoid a hazard.